FINISHING ROOM
Paint Plywood

GUILD ◆ EDITION

IN THE SHOP
Box-Making Lessons

Woodsmith®

Woodsmith.com

Vol. 47 / No. 279

Rev Up Your CNC Game

Projects Inside:

- 6 Drawer Dresser
- Cool Tool Stool
- Whimsical Automaton pt. 2
- Roycroft Table

Purveyors of Fine Machinery® Since 1983

Grizzly Industrial®

Quality Machines, Buy Direct & Save

FREE CATALOG!

Request yours at grizzly.com/forms/catalog-request

640 PAGES

10" x 18" Benchtop Wood Lathe

Flexibility for any project

- Variable speed 650–3800 RPM
- Spindle speed DRO
- Quick release on rest and tailstock for easy adjustments
- Solid cast-iron construction
- Includes 3⅛" faceplate and MT#2 live and spur centers
- Footprint: 30" x 8"
- Shipping weight: ≈ 78 lbs.

MADE IN AN ISO 9001 FACTORY

T25926 ONLY $439

$49.95 SHIPPING

6" x 48" Belt/9" Disc Combo Sander

Use both horizontally and vertically

- 6¼" x 17" Graphite-coated platen
- Quick belt-release mechanism
- Cast-iron table, disc, and body
- A-frame stand to minimize vibration
- Dual dust ports
- Footprint: 23" x 19"
- Shipping weight: ≈ 137 lbs.

MADE IN AN ISO 9001 FACTORY

G1014Z ONLY $550

$199 FREIGHT

14" Benchtop Drill Press

Increase efficiency with unique features

- 12-Speed spindle, 340 to 2860 RPM
- LED light increases visibility for drilling precision
- Push-button spindle depth stop for repeatable drilling
- Rack-and-pinion vertical table movement
- Laser line guides for accuracy
- Footprint: 18" x 10½"
- Shipping weight: ≈ 116 lbs.

MADE IN AN ISO 9001 FACTORY

T33901 ONLY $559

$199 FREIGHT

Sliding Crosscut Attachment for Table Saws

NEW!

Turn your table saw into a sliding table saw

- Crosscut entire sheets of plywood
- Repeatable cuts with adjustable flip stops
- Miter fence for controlled angled cuts
- Extension bar supports long stock
- Anodized aluminum components
- Ergonomic lock handle
- Shipping weight: ≈ 70 lbs.

T32737 ONLY $695

$39.95 SHIPPING

14" 1 HP Bandsaw

Perfect for small shops

- Extruded aluminum rip fence
- Quick-release blade tension
- Cast-iron table and frame
- ⅜" Blade and miter gauge
- Table size: 14" x 14"
- Footprint: 24½" x 17½"
- Shipping weight: ≈ 207 lbs.

MADE IN AN ISO 9001 FACTORY

G0555 ONLY $850

$199 FREIGHT

1½ HP HEPA Cyclone Dust Collector

NEW!

Space-saving dust collector

- Wall-mount design frees up floor space
- 0.3-Micron filtration rating
- 770 CFM
- 2-Stage cyclonic action
- Quick-release 20-gallon drum
- 73dB Quiet operation
- Footprint: 17" x 17"
- Shipping weight: ≈ 173 lbs.

G0990 ONLY $950

$199 FREIGHT

10" 2 HP Open-Stand Hybrid Table Saw

Compact and mobile workshop companion

- 30" Rip capacity
- 40¼" x 27" Table
- Easy-glide fence system
- Cast-iron trunnions
- Built-in mobile base
- Footprint: 21" x 19½"
- Shipping weight: ≈ 297 lbs.

MADE IN AN ISO 9001 FACTORY

G0962 ONLY $1060

$199 FREIGHT

18" 2 HP Open-End VS Drum Sander

Sand boards up to 36" wide

- Electronic variable-speed conveyor motor
- 4" Aluminum sanding drum
- Stationary drum headstock
- Accepts hook-and-loop sandpaper
- Sandpaper conveyor belt
- Footprint: 37" x 20½"
- Shipping weight: ≈ 239 lbs.

MADE IN AN ISO 9001 FACTORY

G0458ZX ONLY $1125

$199 FREIGHT

6" x 46" Jointer

Perfect edges, zero frustration

- 32-indexable-carbide insert spiral cutterhead
- Lever-adjusted infeed table with depth gauge
- Handwheel-adjusted outfeed table
- Rack-and-pinion adjusting fence
- Built-in mobile base
- Footprint: 18" x 13½"
- Shipping weight: ≈ 266 lbs.

G0452Z ONLY $1255

$199 FREIGHT

INTRODUCING

15" 2 HP Benchtop Planer

w/ Spiral Cutterhead and Digital Readout (DRO)

Finally, a 120V portable benchtop planer that can handle 15" wide boards! Set your small shop up for bigger jobs with this large-capacity benchtop planer.

Featuring a digital readout for board thickness, a handy 5-preset depth stop for repeat operations, board return rollers, and a powerful 2 HP motor with spiral cutterhead, the G0999 is ready for production work.

Specifications

- Motor: 2 HP, 120V, single-phase, 16.5A
- Max. stock width: 15"
- Max. stock thickness: 6"
- Max. cut depth @ full width: 1⁄16"
- Feed rate: 12, 22 FPM
- Cutterhead: 4-Row spiral with 32 indexable carbide inserts, 5600 RPM
- Table size: 15" x 23"
- Dimensions: 28½" W x 29½" D x 18½" H
- Approximate shipping weight: 160 lbs.

G0999

ONLY

$1295

$199 FREIGHT

See the Grizzly planer in action!

EVERYTHING FOR THE WOODWORKER

grizzly.com®

800-523-4777

#GRIZZLYTOOLS

affirm Monthly Payments | clicklease Business to Business Equipment Financing

FINANCING AVAILABLE

Please visit grizzly.com for up-to-date pricing.

Due to rapidly changing market conditions, our advertised prices may be changed at any time without prior notice.

WARNING! †1 : Cancer & Reproductive Harm

Some products we sell can expose you to chemicals known to the State of California to cause cancer and/or birth defects or other reproductive harm. For more information go to www.P65Warnings.ca.gov

23545

Woodsmith®

AN ACTIVE INTEREST MEDIA PUBLICATION

EXECUTIVE EDITOR Phil Huber
SENIOR EDITOR Erich Lage
ASSISTANT EDITOR Rob Petrie

EXECUTIVE ART DIRECTOR Todd Lambirth
SENIOR ILLUSTRATOR Dirk Ver Steeg
SENIOR GRAPHIC DESIGNERS Bob Zimmerman, Becky Kralicek
CONTRIBUTING ILLUSTRATOR Harlan Clark

CREATIVE DIRECTOR Chris Fitch
PROJECT DESIGN EDITOR Dillon Baker
PROJECT DESIGNER/BUILDER John Doyle
CAD SPECIALIST/BUILDER Steve Johnson
SHOP MANAGER Marc Hopkins
CONTRIBUTING PHOTOGRAPHER Chris Hennessey

ADVERTISING DIRECTOR Jack Christiansen
847-724-5633
jchristiansen@aimmedia.com
AD PRODUCTION COORDINATOR Julie Dillon
GRAPHIC DESIGNERS Anna Otto

HOME GROUP
ACTIVE INTEREST MEDIA

SENIOR VICE PRESIDENT, CONTENT Rob Yagid

ACTIVE INTEREST MEDIA

CHAIRMAN & CEO Andrew W. Clurman
CHAIRMAN EMERITUS Efrem Zimbalist III
CHIEF OPERATING OFFICER Brian Van Heuverswyn
CHIEF FINANCIAL OFFICER Adam Smith
SENIOR VICE PRESIDENT, MARKETING Erica Moynihan
VICE PRESIDENT, MARKETING Amanda Phillips
VICE PRESIDENT, CIRCULATION Paige Nordmeyer
VICE PRESIDENT, SALES OPERATIONS Christine Nilsen
VICE PRESIDENT, EVENTS Julie Zub
VICE PRESIDENT, DIGITAL PRODUCT DEVELOPMENT Ashley MacDonald
VICE PRESIDENT, STRATEGY & RESEARCH Kristina Swindell
DIRECTOR, HUMAN RESOURCES Scott Roeder
DIRECTOR, PRODUCTION Phil Graham
DIRECTOR, RETAIL SALES Susan A. Rose
DIRECTOR, INFORMATION TECHNOLOGY Andrew Shattuck

Woodsmith® (USPS 465-410) (ISSN 0164-4114) is published bimonthly by the Home Group of Active Interest Media Holdco, Inc. The known office of publication is located at 2143 Grand Ave, Des Moines, IA 50312. Periodicals Postage Paid at Des Moines, IA, and additional mailing offices. Postmaster: Send address changes to Woodsmith, Box 37274, Boone, IA 50037-0274. Postmaster: Send all UAA to CFS. (See DMM 507.1.5.2); NON-POSTAL AND MILITARY FACILITIES: Woodsmith, Circulation Department, PO Box 37217, Boone, IA 50037" Printed in U.S.A.

Woodsmith® is a registered trademark of Active Interest Media Holdco, Inc.
Copyright© 2025 Active Interest Media Holdco, Inc. All rights reserved.
Subscriptions: $29/year, Single copy: $7.99
Canadian Subscriptions: Canada Post Agreement No. 40038201. Send change of address information to PO Box 881, Station Main, Markham, ON L3P 8M6.
Canada BN 82564 2911

WoodsmithCustomerService.com

ONLINE SUBSCRIBER SERVICES

- **VIEW** your account information
- **PAY** your bill
- **RENEW** your subscription
- **CHANGE** your mailing or e-mail address

CUSTOMER SERVICE Phone: **800-333-5075** weekdays

SUBSCRIPTIONS
Customer Service
2143 Grand Avenue
Des Moines, IA 50312
subscriptions@aimmedia.com

EDITORIAL
Woodsmith Magazine
2143 Grand Avenue
Des Moines, IA 50312
woodsmith@woodsmith.com

from the editor

Sawdust

Recently on the ShopNotes Podcast, Logan told a story about a road trip. A listener heard about Logan's interest in acquiring an anvil. The listener had one, but rather than sell it, he asked about trading it for some walnut lumber and a few restored hand planes Logan had. Deal. This story is a microcosm of the way woodworkers and woodworking shapes the kind of world we want to live in. Stay with me. It's the transformation of our interests, care, and love (of wood, tools, and the people we build for) into an object for the enjoyment of others and ourselves in the process.

We like to tell ourselves that building furniture saves money over the cost of buying something from a store. This is both true and untrue. Factor in the value of our time plus the cost of tools plus cost of the materials and the math works against that reasoning.

However, I think that it's the informal economy of giving our own time in exchange for a project that gathers up our skills into something of another kind of value. The woodworkers I meet form a generous fraternity. Giving, sharing, trading, exchanging in ways that are difficult to measure by the typical metrics of economics. This is the joy of being a hobbyist woodworker and I wouldn't trade that for anything.

SOMETHING NEW. In addition to creating the magazine, website, videos, podcast related to woodworking, the *Woodsmith* staff also answers questions from readers, viewers, and listeners like you. These kinds of questions (and the answers we provide) are like small articles. So I've decided to share some highlights in every issue. Check out the first round on page 12. If you have any woodworking or *Woodsmith*-related questions, please send them to me: phuber@aimmedia.com

contents

No. 279 • June/July 2025

Projects

shopnotes project
Tool Stool 28
Taking your tools on the go shouldn't mean doing without. This carryall doubles as a small-scale workbench.

heirloom project
Dresser 36
The timeless beauty and practicality of this dresser belies the fact that it has a heart of plywood.

utility project
Dust Pan 44
Upgrade your clean up routine. Learn how to create curved corners with box joints on a broom's best friend.

designer project
Automaton, part 2 50
A hand-carved woodworker and his faithful companion complete this clever "kinetic sculpture."

weekend project
Roycroft Table 56
Take a trip down another path in Arts and Crafts furniture. This table features exposed joinery and great design.

Departments

from our readers
Tips & Techniques 6
Letters & Questions 12

all about
Butterfly Hinges 14

finishing room
Painting Plywood Edges 18

great gear
CNC Helpers, Sander & Paint Sprayer . . . 22

designer's notebook
Box-Making Lessons 62

Sources 66

Dust-Free Routing

Routing can make quite the mess. Of course, a little dust in the shop is no big deal, but at the router table all that sawdust can certainly get in the way. That's why I created this dust chute, which is easy to make and attach to any table.

The chute is made from just a couple pieces of plywood and hardboard glued together. The holes in the top and the dust port dictate the air flow. To attach it to your router table, all you need to do is drill a hole in the table top to match the one in the top of the dust chute, then glue the chute on underneath. With the hose attached, the sawdust and chips get sucked clear as you rout.

Phil Huber
Urbandale, Iowa

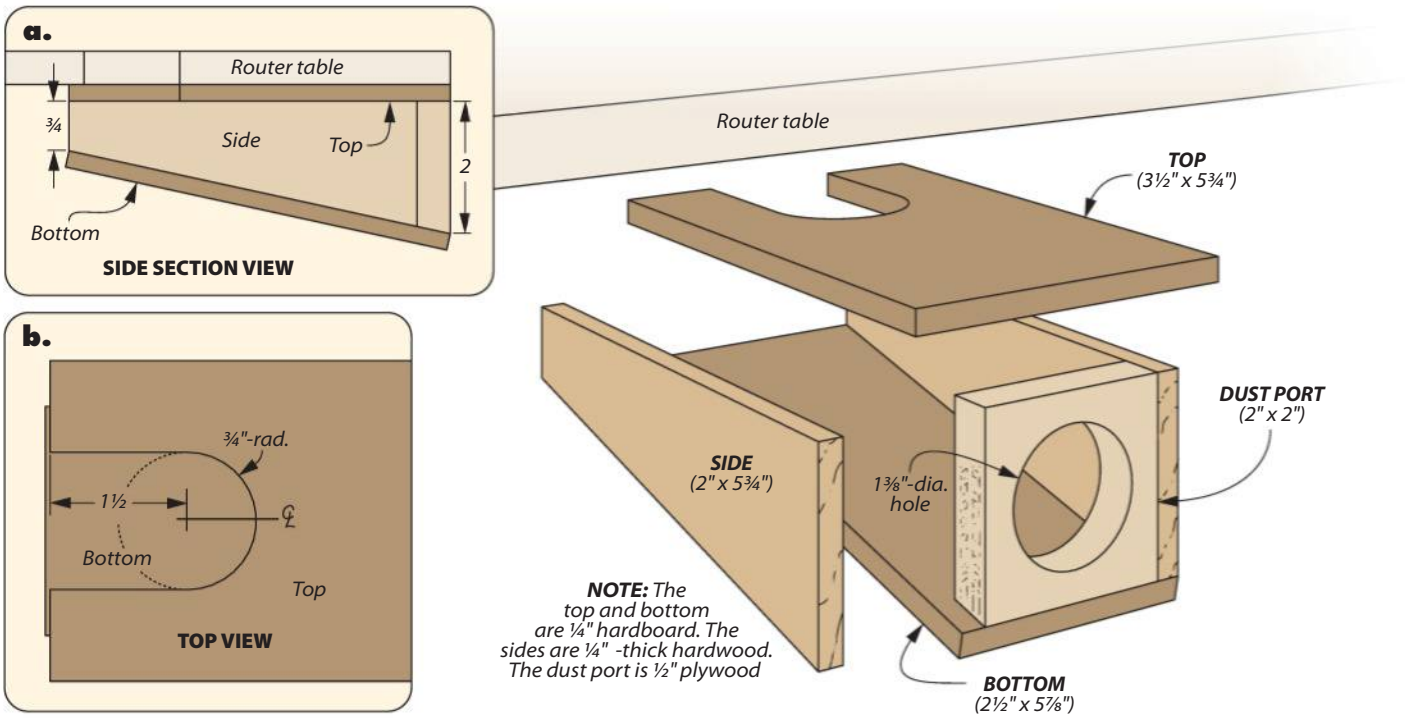

Compiled by: Rob Petrie; Built by: John Doyle

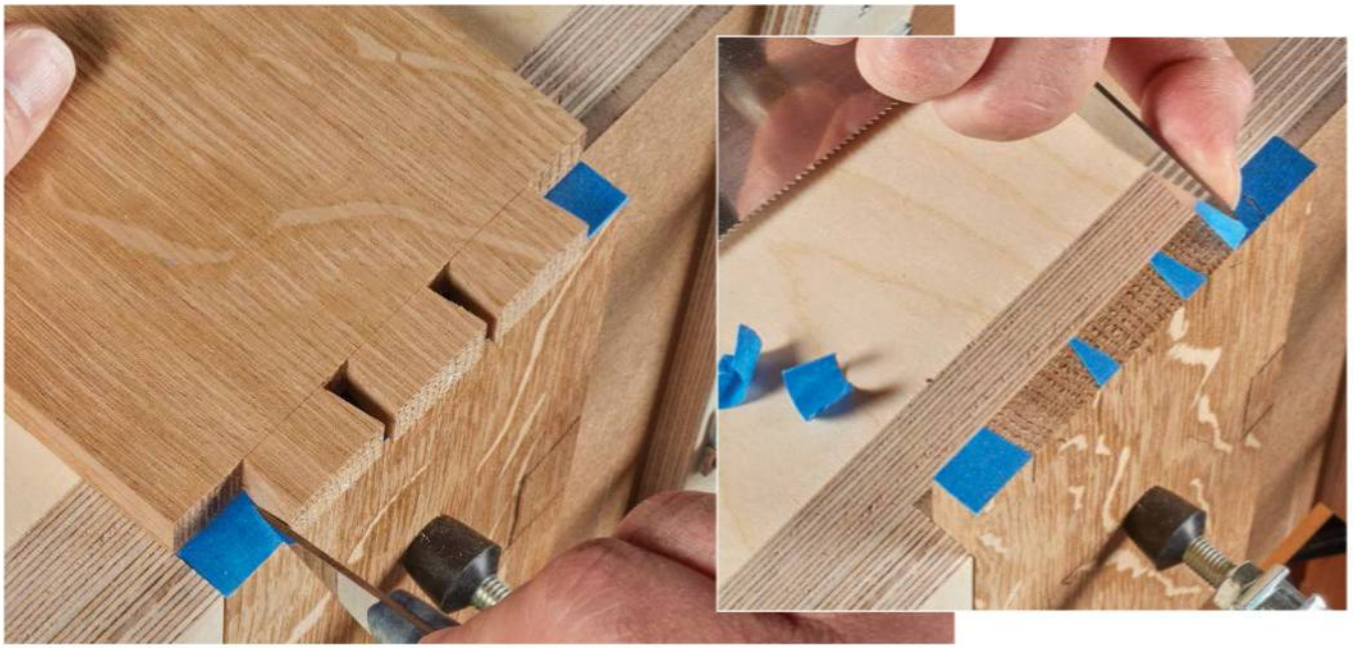

Tape Marks the Spot

An accurate layout is vital when it comes to dovetails. Making the first half of the joint is simple enough with a bevel gauge or dovetail jig, but its mate needs to be marked directly. I begin with a strip of painter's tape across the end of the mating board. Scribing the layout with my marking knife cuts the tape, and after peeling off the sections beneath the tails, I'm left with perfect indicators of where the waste is.

Jason Lipscomb
Bridgeport, New Jersey

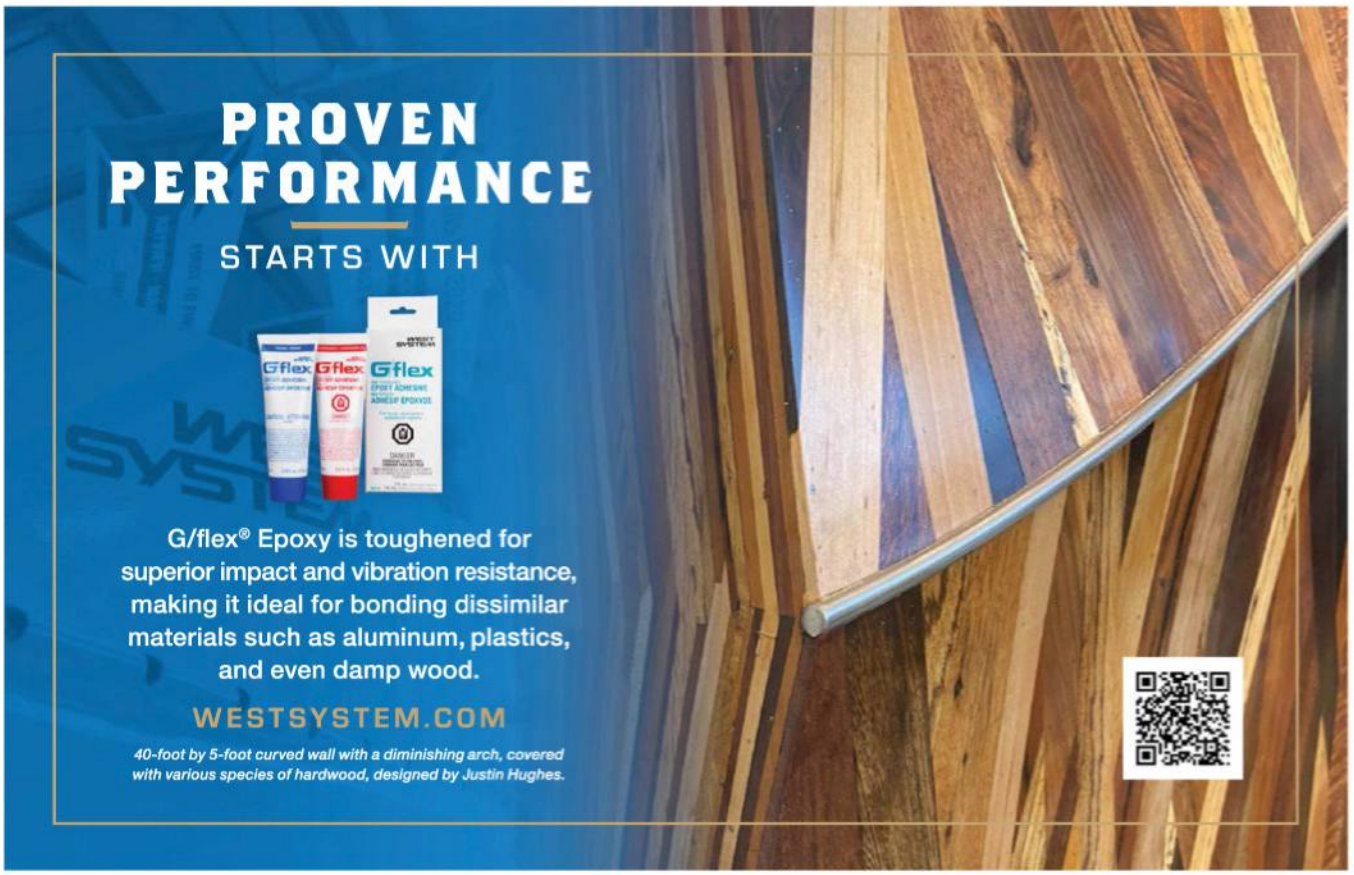

Illustrations: Becky Kralicek

Miter Gauge Sled

Sleds are great at the table saw, whether it's for small parts or precise crosscuts. However, they do require a pair of miter bars to be installed on the bottom at exactly 90°. These bars aren't terribly expensive, and installing them isn't too hard (but it can be tedious). To save myself the money and the headache, I opt for using miter gauges instead.

For this purpose, any old pair of miter gauges will do. Set both to 90°, then place them in the miter slots on your table saw. Position your sled and screw it in place. This provides a free set of miter bars, and makes attaching them accurately a snap. If you need to switch to a different sled, all you need to do is unscrew them from one and screw them onto another. Plus, I now have a convenient pair of handholds for pushing the sled.

John Floyd
White Plains, New York

QUICK TIPS

Socket Depth Gauge. *Daniel Brandner* of *Eleva, WI* didn't have the right depth gauge and instead chose to use a metal socket. The socket served as a stop, while the position of the drill bit in the chuck fine-tuned the depth.

SUBMIT A TIP TO WIN

GO ONLINE

If you have an original shop tip, we would like to hear from you and will consider publishing your tip in one or more of our publications. So jump online and go to:

SubmitWoodsmithTips.com

You'll be able to tell us all about your tip and upload your photos and drawings. You can also mail your tips to "Woodsmith Tips" at the editorial address shown on page 2. We will pay up to $200 if we publish your tip.

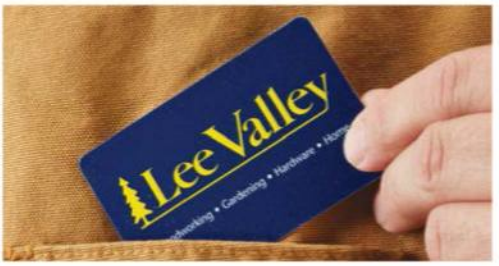

Routing Stopped Slots

Stopped slots are useful joinery, and they're not hard to make. What can be tricky though is knowing exactly when to stop routing, especially if the slot is stopped on both ends. The workpiece often covers a stop mark on shorter router table fences — until you've already gone past it. To remedy that, I always mark an arrow before my stop line when routing these kinds of slots so I can watch my progress and be sure to stop exactly when the workpiece hits the stop mark.

Bill Hamilton
Bethany, Illinois

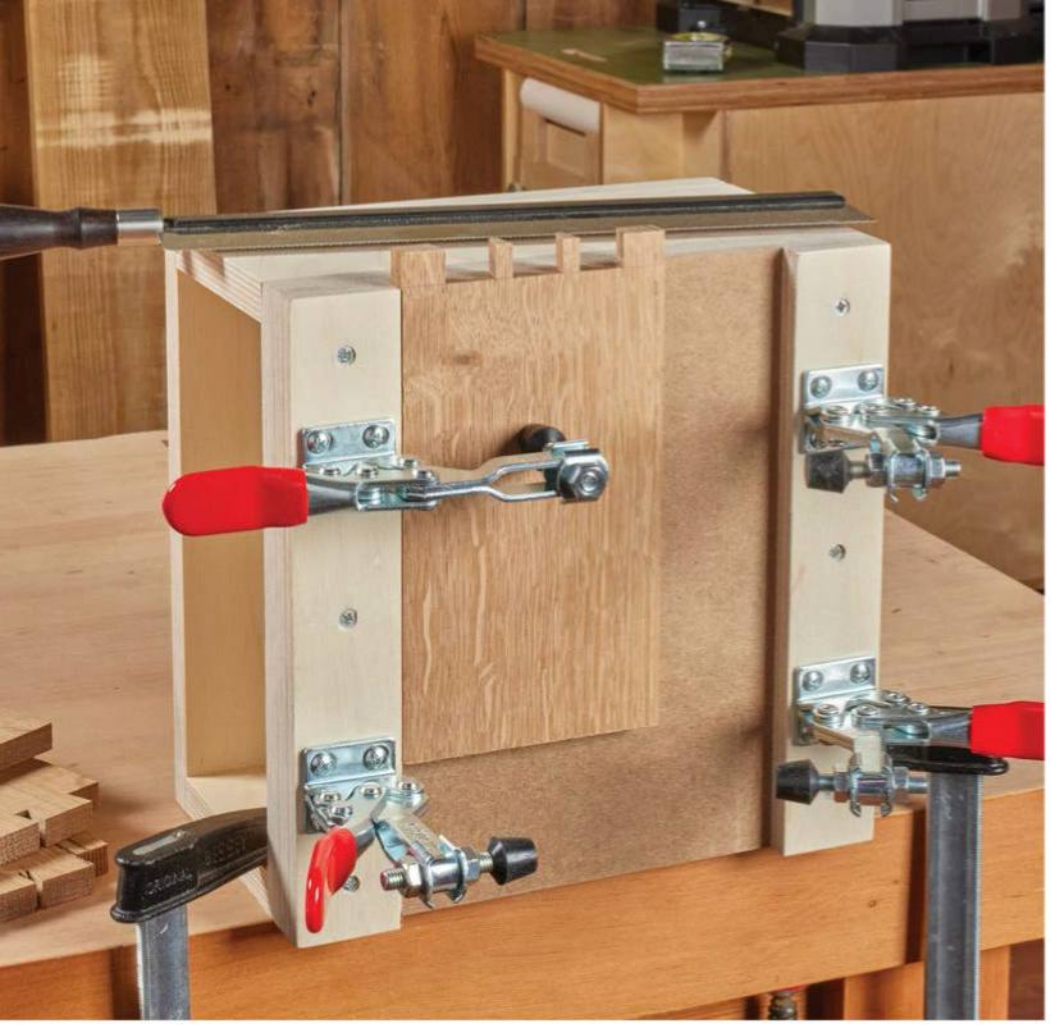

Toggle Clamp Vise

To get the best results when working by hand, it's important to be comfortable. Having the piece at a good working height will make for better joints (and it'll feel a lot better on your lower back). There are plenty of options, but the best one for me has been the shop-made vise you see at left.

You can see below how I put this vise together. Plywood is the material of choice here for its stability, save for the clamping face where I chose to use hardboard for a nice, smooth surface. Screws and butt joints do the heavy lifting. Four toggle clamps attach to the front, allowing me to quickly swap between workpieces.

Mike Pekovich
Middlebury, Connecticut

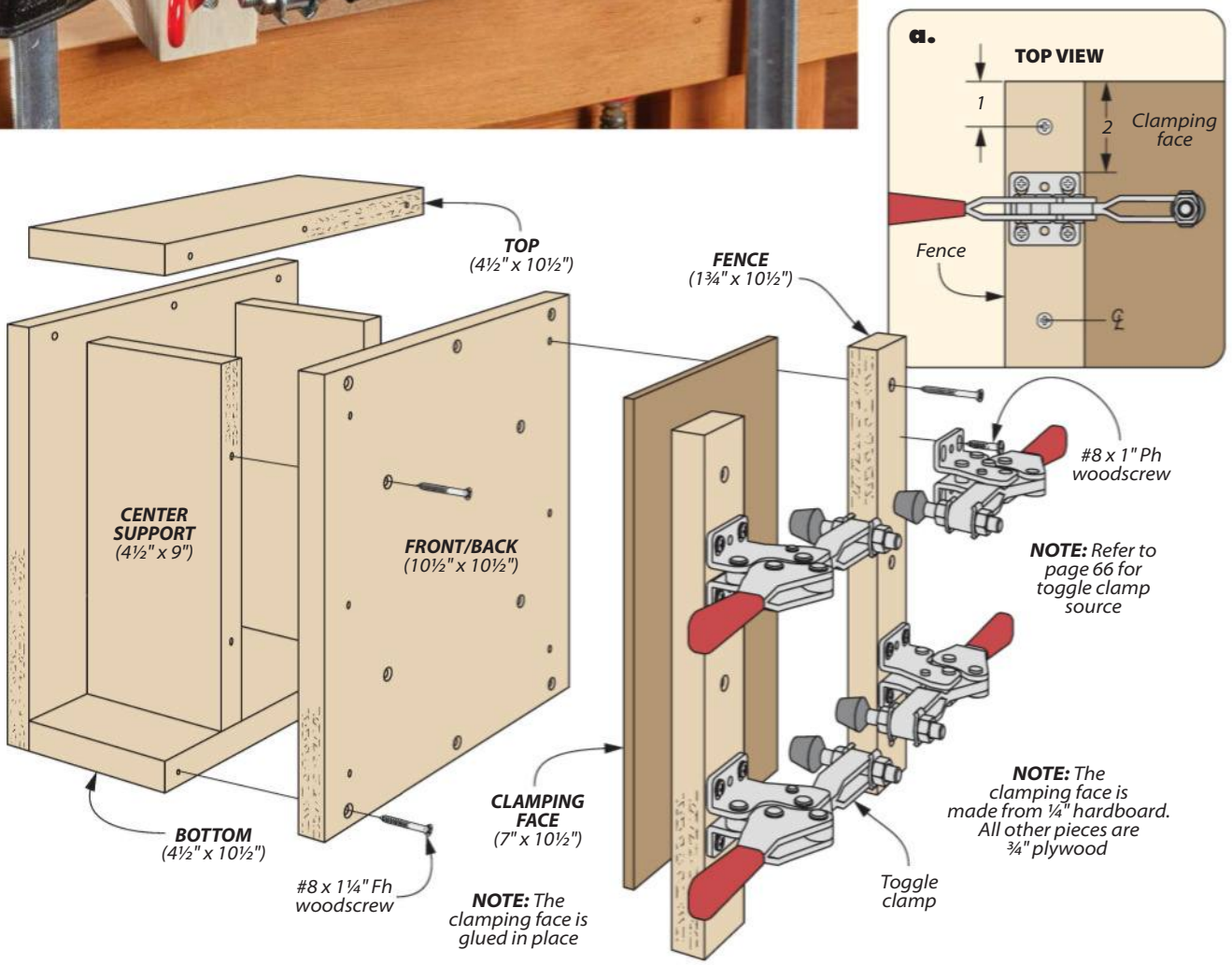

QUICK TIPS

Pocket Hole Dowels. *Dan Martin* of *Galena, OH* came up with a good way of keeping his pocket screw holes aligned during assembly. Clamping a dowel through the pilot hole helps to keep the workpieces butted properly together as he drives in the pocket screws.

Coordinated Dust Collection. *Mark Hopkins* of *Des Moines, IA,* uses a splitter on his automated vacuum, allowing him to attach both a 5" sander and detail sander to the same vacuum and swap as needed.

DIGITAL WOODSMITH

RECEIVE FREE ETIPS BY EMAIL

Now you can have the best time-saving secrets, solutions, and techniques sent directly to your email inbox. Simply go to: ***Woodsmith.com*** and click on,

Woodsmith eTips

You'll receive one of our favorite tips by email each and every week.

Comments & Questions

STAINING WITH STEEL WOOL

I was watching the video where Phil was staining a table top with an oil stain and steel wool. He mentioned after the first coat that he wiped up the little excess stain on a rag. Then he talked briefly about applying 2 or 3 additional coats but didn't mention if for those coats you should use steel wool as well?

Martin Frasher

Hi Martin, John McPhee's technique for applying stain with steel wool works well. The part of the video that you refer to is where I'm talking about applying a clear topcoat, not additional coats of stain. For the top coat, I would use a brush, rag, or whatever you typically use for oil-based varnish, shellac, or water-based finish.

Phil Huber, Executive Editor

To watch this video, scan the QR Code above

WOODWORKING IN AMERICA

I was unable to attend the *Woodworking in America* last year. I'm looking for information for this year. Can you send me some information for this year's program?

Thank you,
Alan Boughton

Hi Alan, you missed a great show last year. One of our side projects is planning the 2025 version of the show. It's going to be held October 10 & 11, with an open house held at the Woodsmith *mothership on the evening of the 9th. We're moving to a larger space: the 4H building at the Iowa State Fairgrounds. This new space provides plenty of rooms for presenters, a larger venue for vendors, and room to hang out and talk about all things woodworking. We're bringing back a few presenters from last year: Alexis Dolese and Gary Rogowski (so far). In addition, Mark Harrell from* SawSharp *is joining us. Yoda says "Always in motion, is the future." You can keep up by checking the web site:*

Phil Huber, Executive Editor

CHAIR DUPLICATOR

I am looking to make a dining room table and chairs and my first hurdle is: how can I make 10 chairs with scooped seats and have them all turn out the same?

I saw a plan for the *Woodsmith* duplicator and wondered if you guys think this would actually work with the right router bit?

I have an existing chair that I can use the scooped seat from as the template for the jig.

What do you guys think? I'm open to any suggestions.

Thanks for a great publication. I still have the first issue!!

Patrick Schwager

Hi Patrick, Thanks for writing in about your project. You clearly don't lack ambition taking on 10 chairs! I designed and built the duplicator years ago (plans are available at Woodsmithplans.com*) and my thought is that it will work well but it might be slow going as there is going to be a limit to the depth and*

width of cut before things start to chatter. So, it may take quite a few passes depending upon the scoop.

I used a palm router in the original but there is no reason that you

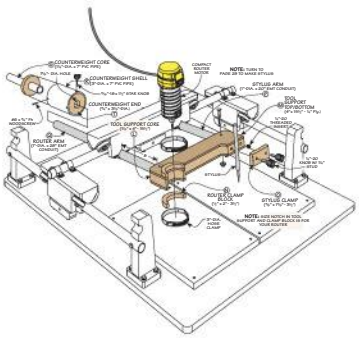

couldn't use a 1½ hp router and definitely use a ½" shank bit – maybe a core box or one of the smaller bowl cutting bits to give a decent finish. Of course, the type of wood you select will make quite a difference in how the work progresses. The consistency of using a duplicator might well make it worth a try.

Chris Fitch, Creative Director

DRAWER JOINERY

In the February/March 2025 issue, the drawer plans for both the Tool Tote and Storage Bench use different types of joints for the drawer fronts and backs.

I have seen this in other plans as well. What is the purpose of using different joint types for the front and back? It seems like having one setup for both is much faster and easier than having two different setups (as well as reducing the chances of making a mistake).

Clifford Nelson

Hi Clifford, Thank you for writing in about drawer joinery. There are many ways to make drawers and no one way is right. I used to work in a cabinet shop and all our false front drawers that rode on metal slides used a tongue and groove joint front and back for the reasons you state – it is faster and easier to use just one setup.

Different situations in furniture building call for different reasoning. When using a drawer lock joint up front I don't want to have the end grain of the drawer back dragging against the cabinet sides and choose to use a housed dado in the location. Hand-cut dovetails look wonderful on the front of a drawer but are a lot of time and effort for the drawer back, so a simpler joint there makes more sense.

Very often I will choose to use a strength-based joint up front and a housed dado for the back of the drawer simply because it creates the look of a traditionally made drawer. That may not be a completely rational decision but much of furniture building is about tradition and creating a look that follow a style.

Please feel free to change up the drawer building methods that we use and build in a way that suits your purposes and style of work.

Chris Fitch, Creative Director

CHESSBOARD WARPING

In December of 2023 I made the Chess Set detailed in your 255 issue. However, now (March 2025) the playing surface has cupped. That is it is higher on the sides than the middle. Do you have any idea why this would happen? Any help you can provide would be helpful.

Robert Curtis

Hi Robert, I'm sorry to hear that the board has warped. Solid-wood chess boards are always a bit of a gamble for staying flat over time. That's because despite being made up of 64 pieces, it's still ends up as a wide solid-wood board and subject to wood movement.

The best way to minimize warpage is to carefully choose wood in which the growth rings are nearly vertical in the board, more quartersawn than flatsawn. The wood should also be allowed plenty of time to acclimate and stabilize to your shop before final milling.

At the Woodsmith *production shop the air is notoriously dry in winter, so we try to order our wood several weeks in advance of building a project. After the wood is rough milled to thickness and size, we let it sit for a few days, if possible, so that any additional drying that might occur and internal stresses will show themselves in movement. Then it's time to mill the parts to final shape. That's the theory, but of course getting the work done on time can get in the way.*

The only iron clad way of avoiding the risk of cupping in a chess board is to not use solid wood, instead opting to use veneers over a stable substrate such as MDF. Veneering is a different skill set so I did not want to go there when designing this project — and most solid-wood chessboards stay reasonably flat.

I hope your board will flatten some out with the changing seasons. There are no easy fixes other than to remove some of the wood and to make the board flexible enough to be drawn flat. This can be accomplished by sawing a kerf along each glue line about half to ¾ of the thickness using your table saw. The kerfs can be filled with wood strips and the board sanded and refinished.

Chris Fitch, Creative Director

Exploring Butterfly Hinges

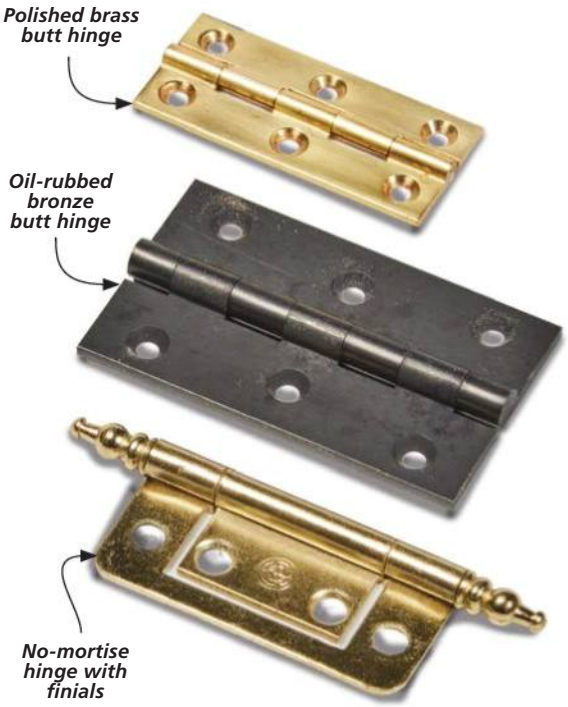

There's no shortage of options when it comes to selecting hardware. In this article we'll be looking at one of the most common kinds of hardware, and one which I'm sure almost all are at least a bit familiar with: butterfly hinges — or, as they're more commonly known, butt hinges.

The butt hinge has long been a ubiquitious choice for doors of all sizes, and for a good reason. They're simple: two leaves join at a knuckle, held together by a pin. There are no mystifying mechanics like a Euro hinge, nor do they require the precision of a knife hinge to install. They're easy to understand and to implement, but that's not the whole story.

HINGE VARIETIES. Though they're simple, not all butt hinges are made the same. Most you'll find will look like the upper two at left. Others have decorative leaves, while some have finials, as you can see in the lower hinge at left. That one is also a unique kind of butt hinge: a no-mortise hinge. As the name implies, it's intended to be used without a mortise, as the leaves fold in together to minimize the gaps around the door instead.

Indeed, the wide variety of looks is one of the draws towards butt hinges. You'll also notice that the three hinges at left have different finishes. Sellers such as *Brusso* or *Horton Brasses* offer a number of options, from polished brass for a clean and sleek box to oil-rubbed bronze for an aged aesthetic on a Craftsman cabinet. Butt hinges are easier to match to certain styles and aesthetics than other hinge options.

Written by: Rob Petrie

Learn more
shapertools.com/origin

WHERE DIGITAL PRECISION MEETS CRAFT

- No computer programming required
- Works alongside other shop tools
- Portable and easy to store

Shaper Origin brings best-in-class portability and precision to any job. Create tight-fitting joinery, custom inlays, install hardware, make custom templates and more.

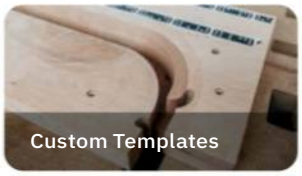

SHAPER

PRECISION CUTTING SIMPLIFIED

BUTT HINGES IN PRACTICE

When we're selecting the hardware for a project, looks play a big part, but so do quality and cost. However, the latter two (and sometimes the former as well) often go hand in hand.

A QUESTION OF QUALITY. You'll find plenty of different butt hinges at almost any hardware store, and these tend to be pretty cheap. Pick one up and you'll likely find that there's play, either vertically, between the knuckles, or horizontally, around the pin. Now, there are plenty of times when a hinge with a bit of play is fine, but that's not always the case.

The photo you see at the upper right is from the Monterey Cabinet we featured in issue 256. Large wings unfurl from the top to reveal a fold-out bar. The hinges here needed to be strong enough to support the glasses and bottles, and any play in the hinge would be magnified across the wing, causing it to catch as it opened or closed. The hinges we often use from places like *Horton Brasses* can easily cost you $40 or more a piece. That might seem steep, but when you feel the hinge, you'll instantly notice the lack of play, which was precisely what this cabinet required.

TO MORTISE, OR NOT TO MORTISE? Most of the time when you see a butt hinge in *Woodsmith*, you'll find that we mortise it in place. However, this isn't always necessary. If you're considering whether or not to mortise a butt hinge, there are two questions to answer.

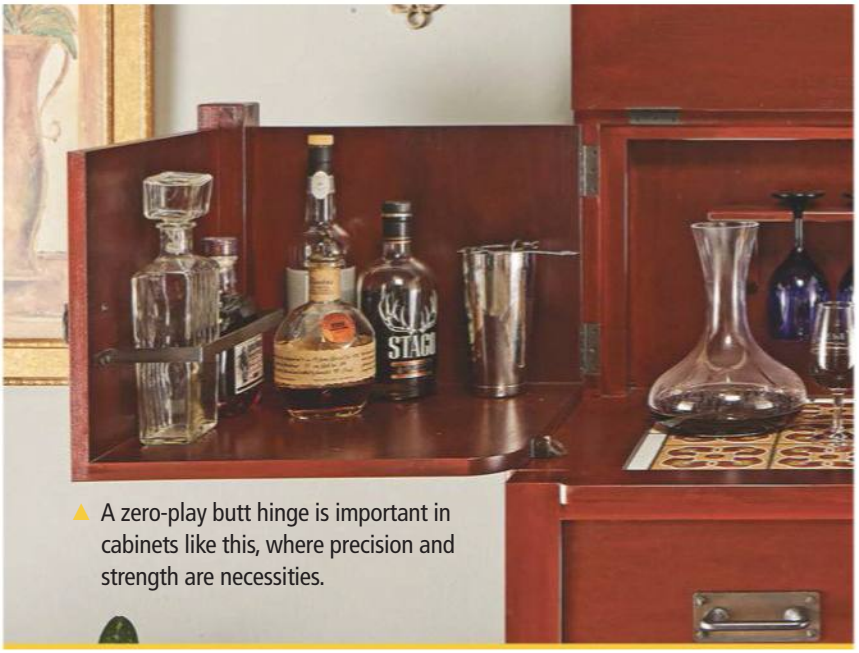

▲ A zero-play butt hinge is important in cabinets like this, where precision and strength are necessities.

First, how much of a gap do you desire? Most inlaid doors use a mortise for the sole factor of minimizing the relief around a door. On overlaid doors this is much less of an issue, as you'll only notice the gap from the side. Additionally, no-mortise hinges or swaged hinges, like the one in the lower left photo, will eliminate that gap on their own.

Second, how much weight will this hinge support? A butt hinge that isn't mortised in place is relying only on the strength of the screw threads in the wood. By contrast, a mortise allows the force to be distributed between the screws and the leaves evenly. This makes for a much more reliable connection on a fold-out wing like in the cabinet above, or even just for heavier doors like you see below.

TIMELESS HARDWARE. There aren't a whole lot of examples where butt hinges are a bad idea for hanging doors — often it's a matter of taste. The strength they provide and their ability to match a number of styles are their true advantage. With these parts, you get what you pay for, but the results are well worth it, and I recommend trying them on your next your project. W

▲ A swaged hinge (shown at right) has a unique curve — or swage — at the knuckle, resulting in a smaller gap between the door and its frame.

▲ A mortise isn't necessary on every butt hinge, but it's a good idea for heavier doors, as it spreads the force across the leaves instead of just the screws.

EXCELLENT ACCURACY & RELIABILITY

Quality machines with proven performance.

QUALITY TOOLS
SHOP FOX®
SINCE 1989

grizzly.com/shopfox

TWO YEAR WARRANTY

Available at these fine retailers:

grizzly.com · JB TOOLS · ACME TOOLS · THE TOOL NUT · & MORE! See website for details

Painting Wood

The idea of constructing a project from hardwood with traditional joinery, then painting it, may seem like sheer blasphemy or just down-right sacrosanct, but adding color to a naturally porous surface can yield some interesting results that can elevate a project — or, at the very least, catch the attention of the unsuspecting onlooker. Over the years we have taken the liberty of painting projects using any number of products and techniques, from aerosol cans that produce a hammered metal look, to distressed and crackled finishes using milk paint and hide glue. But there are nuances to the

Written by: Dillon Baker

▲ Filling voids and cracks before sealing end grain or plywood edging is a sure way to get a smooth, seamless finish. The products shown in the upper right hand photo are all suitable candidates when it comes to durability.

surface preparations that go beyond achieving a specific look that are necessary when applying paint. Material, like humans, is imperfect and sometimes need a bit of conditioning. The image you see to the left utilizes paint in a way that masks certain features, while providing a stark contrast that accentuates color and grain. Follow along, as we'll discuss the variety of applications that will be sure to produce desired results.

EDGE TREATMENT

Before you go adding paint to a project, consider the finish you wish to achieve. Once this is established, you will want to address any gaps, cracks or holes in your material that could potentially show through the topcoat. A tried and true product for filling small gaps is wood filler. It's easy to apply and dries quickly. For larger holes and cracks I like to use a two-part epoxy, which is stablizing and creates a smooth finish. When it comes to more porous materials like Combi-core plywood or MDF, white glue and water putty are great choices for creating a paintable barrier. Both dry rock-hard and can be sanded for multiple coats.

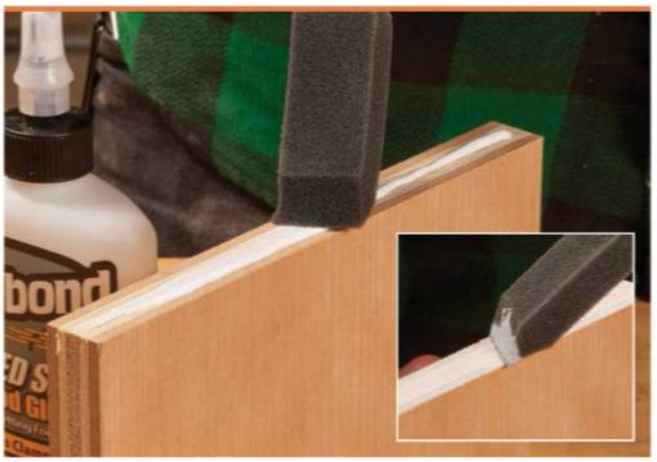

▲ Thin layers of epoxy, PVA or even traditional white glue penetrate and seal the porous end grain of plywood. This results in an even surface, ensuring a consistent appearance ready for paint.

▲ Shellac works as a versatile sanding sealer as it is resistant to water and alcohol. For those high-traffic areas, try an exterior penetrating sealer, like the one from *Old Masters* shown above.

I USE A WAGNER MOISTURE METER BECAUSE:

These are family heirlooms

80% of all problems in wood projects are caused by moisture content issues. A quick and simple, non-damaging moisture meter reading can save you from angry customer calls, unnecessary repair time, and a bad reputation. Call today and learn why Wagner's industry-leading Orion meters may just be the most important tool for your job.

WAGNER METERS (877) 721-8872 | WagnerMeters.com

Painting the edge masks the plies while creating consistent lines between the horizontal surfaces.

Alternatively, leaving the plywood edge exposed adds sharp contrast to the painted surface.

Nothing beats traditional primer to cover "imperfections" in the wood, which creates a smoother, more even finish.

Regardless of whether you are concealing the edging or leaving it exposed, sanding beforehand is encouraged, and will further guarantee a mirror-like finish after the paint is applied.

SURFACE PREPERATIONS

The next step is to treat the surface, or large faces of the material you wish to paint. Similar techniques are employed here, but require further consideration. There are a couple of go-tos for me, personally. Sanding sealers have more than earned their place in this short lineup. These are typically made from lacquer or shellac dissolved in solvent and work well with open-grained or naturally porous wood. Once dry, the sealer creates a smooth, uniform barrier ready to receive stain or paint, for both interior as well as exterior applications.

The second type of sealer I default to is primer (latex/oil-based). Like designated sanding sealers, primer functions to create a flawless foundation on which to build a topcoat. Primer can be tinted to complement your color of choice, which will help cut down on the number of coats needed for uniform coverage. Furthermore, it improves adhesion between the wood

FULL COVERAGE VS. A "WASH"

Appying paint to bare wood provides a splash of color while retaining the visual texture of the grain.

Two of the more common paint applications are the ones you see here. To the left, paint is applied with the intent of getting full, uniform coverage. The contrast of the paint backdropped by the raw material creates a striking visual juxtaposition. On the right, you have a technique known as color washing. This is where a thin, diluted layer of paint is applied over a raw or pre-painted surface. The underlying layer thus shows through, giving the appearance of something weathered or antiqued.

A color wash, or "whitewash," creates a weathered, layered effect, which adds depth.

▲ Foam brushes excel on smooth, flat surfaces, and are a great choice for smaller applications.

▲ Rollers have the ability to cover large areas with more uniform paint

and paint. These two application methods can be somewhat interchangeable, however, it's important to know what results they both yield and how that best suits your preferences.

METHODS OF APPLICATION

The final decision to make is how you are going to apply your topcoat. Spraying may seem optimal, but is not always the most accessible practice. But for projects with lots of real estate, spraying can be time-saving and undeniably consistent. However, for a majority our projects, a combination of brushing and rolling often suffices. Brushes serve the purpose of getting to those hard to reach places, while rollers are economical and offer unparalled control — even for a novice. Roller naps, like brushes, come in a variety of materials and sizes designed to accommodate particular surfaces. Though, regardless of the material, trial and error is encouraged to produce favorable results. So, the next time you entertain painting a project, consider the steps previously discussed and do some experimenting. You never know what complementary results may emerge. W

Sanding, Spraying, & CNC

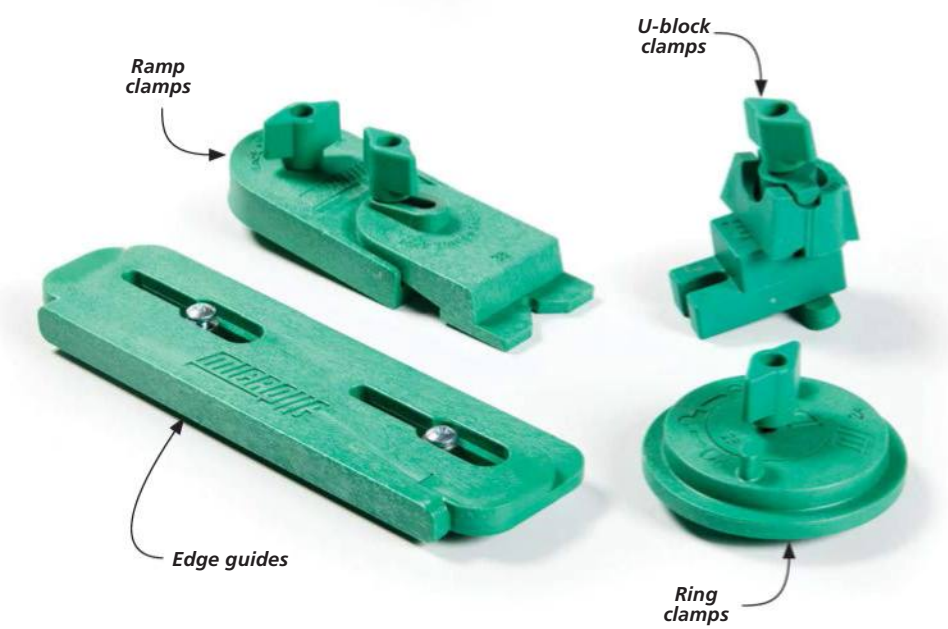

Within woodworking, there are — as the macabre saying goes — plenty of ways to skin a cat. In this issue's Great Gear, we'll be looking at a few products that offer alternatives to your usual ways of working. We'll start in the world of CNC work, followed by options for sanding and applying finish, and I think you'll find these tools merit taking a look at, or even a place in your shop.

CNC WORKHOLDING KIT

The CNC Workholding Kit on this page and the next is from *MicroJig*'s MatchFit line of products, which all revolve around the use of dovetail tracks. In past Great Gears, we've looked at a few options for clamps and hold-downs, but in this issue we're checking out a series of holders designed for CNC projects.

Written by: Rob Petrie

▲ The edge guides are designed to work in conjunction with the ring and ramp clamps. The low profile provides clearance for cuts along the edge.

▲ The rear knob locks the clamp assembly in place. Meanwhile, tightening the front knob wedges the clamp against the workpiece, holding it in place.

EDGE GUIDES. There are four kinds of holders here, and we'll start with the edge guides (shown in the left photo above). These parts have cleats that hold them straight to the edge of the spoilboard. They're designed to brace the workpiece while using the ramp or ring clamps.

RAMP CLAMPS. For most flat-edged workpieces, the ramp clamps will be your go-tos. These consist of two ramped halves that each screw down. The rear knob tightens down first to lock the clamp in place. Tightening the front knob causes the ramped parts to slide down, pressing into the workpiece. This function is great for working with multiple pieces, as the clamp can stay locked in place while loosening the front and switching between pieces.

RING CLAMPS. The ring clamps are designed to be used with curved workpieces, such as the corbel shown in the lower left photo. These have a similar function to the ramp clamps, though a different execution. After locating them, the central knob locks the base in place. The base is ellipical, allowing the ring around it to cam into the workpiece as it rotates in order to hold it in place.

U-BLOCK CLAMPS. The previous three holders apply pressure to the workpiece from the side, which is fine for operations where the force is mostly lateral. However, when the force is being applied mostly upward — as it would be when using a spiral upcut bit — a holder that clamps from above as well is needed. That's where the U-block clamps come in.

You can see how these clamps work in the right photo below. The clamp itself pivots off the U-block, applying pressure to the corners of the workpiece. The four of these that come with the kit are more than sufficient for nearly all CNC projects.

These holders are a welcome addition to my CNC arsenal. Of course, they do need dovetail tracks to work as intended, but *MicroJig* also offers a solution for that, which you'll see soon.

▲ Twisting the ring on these clamps cams against the workpiece to lock it in place. Like the ramp clamps, these can be left in position when exchanging parts.

▲ The U-block clamps are sturdy holders for more demanding cuts. The clamps themselves pivot off of the U-blocks, applying pressure to the corners to prevent the workpiece from moving laterally or vertically.

▲ The hook-and-loop interface makes switching between sanding pads a quick and painless procedure.

M18 RANDOM ORBIT SANDER

I think we can all agree that sanding isn't one of the most enjoyable parts of woodworking, but it's one that needs done. And, when it comes to sanding, a random orbital sander is the most efficient choice. The sander you see here is from *Milwaukee*'s line of "FUEL" products, and it's certainly in line with what I expect from *Milwaukee*: a high-quality, battery-powered tool.

PERFORMANCE. In terms of sheer performance, this sander is on par with other reliable brands. Though it has five speed settings for a variety of work, the fifth setting is where most wood sanding will take place. The dust bag you see attached in the photos here works well for smaller projects, while the hose adapter allows it to be hooked to a vacuum for larger pieces.

▲ This orbital sander is a great go-to for small parts like this door, and attaching the hose makes it useful for larger ones as well.

BATTERY-POWERED SANDING. This sander uses *Milwaukee*'s M18 batteries, and I think this is where most people will notice differences in performance and longevity. A smaller battery like the CP2.0 would be fine for a couple doors or drawers, but not a whole cabinet. I used the mid-sized XC5.0 battery and found that gave me plenty of life. So, if you don't mind the caveats of a battery-powered sander, then the M18 FUEL Random Orbit Sander is a convenient and effective option.

▲ The sander offers five speeds. The fifth setting (12,000 orbits per minute) is ideal for most woodworking.

▲ The quick-release levers on the bag and hose conduit simply snap in place, making them easy to attach and detach as needed.

Woodpeckers®

MADE IN USA
Woodpeck.com

Precision Woodworking Squares

- One-piece central core.
- Stainless model includes scribing guides.
- Lip keeps the square flat on your work.
- Guaranteed perpendicular to ±.0085° for life.
- Available in inch or metric.

Precision Woodworking Square
Includes a wall-mountable Rack-It®
12"....$139.99
12" Stainless Steel....$159.99
Other Sizes Available on ***Woodpeck.com***

Precision Woodworking T-Squares

- Scribing guides on 1/16" centers.
- Beveled edge reduces parallax.
- Tight tolerance laser-engraved scale.
- 600mm metric version available.

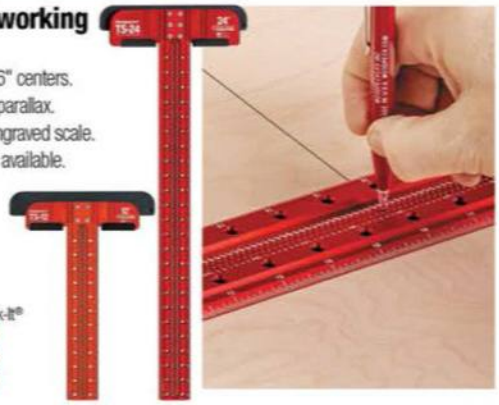

Precision T-Square
Includes a wall-mountable Rack-It®
TS-12 12"....$139.99
TS-24 24"....$159.99
TS-32 32"....$189.99

in-DEXABLE® Combination & Double Squares

- Push-button index locks head at any full-inch.
- Laser-cut scribing guides for precision parallel lines.
- Retractable support keeps head aligned to your stock.
- Available in inch or metric.

in-DEXABLE Squares
Includes a wall-mountable Rack-It®
Double 6"....$139.99
Center Finder 6"....$149.99
Combination 12"....$179.99
Protractor 18"....$249.99
Other Sizes Available on ***Woodpeck.com***

Spline Jig

- Works with both table saw and router table.
- Spline grooves or dovetail keyways.
- Cut splines in projects up to 36" long.
- Stops included for repeat positioning.

Hold-down pivot clamps sold separately.

Spline Jig
....$164.99

Rout-N-Plane® Benchtop Board Mill

Router not included.

- Perfect for end grain cutting boards.
- Adjusts to work with almost any size or style router.
- Two sizes: 15" and 24" wide. Both work from 3/4" to 3" thick.
  - When it won't fit your planer, plane it with Rout-N-Plane!

Rout-N-Plane Benchtop Board Mill
15"....$179.99
24" XL....$219.99

Router Plane

- Includes square & spearpoint blades.
- Blades lapped perfectly flat. Bevels ground and ready for final honing.
- 12 blade positions ensure maximum access & support.
- Fine-thread adjustment with no backlash.
- Ductile iron base with black-nitride treatment.
- Optional fence keeps plane parallel to an edge.

Router Plane
....$279.99
Fence Add-On Kit....$69.99

ULTRA·SHEAR® by Woodpeckers

AMERICAN MADE QUALITY FACTORY DIRECT PRICING

ULTRA·SHEAR
FREE SHIPPING
ON ROUTER BITS & SAW BLADES
**US 48 States only. Ultra-Shear brand only. Cannot be combined with other products.*

Finger Grip Groove Bits

These bits create a subtle concave recess in the edge of your cutting and serving boards. Bearing controls depth of cut.

Carbide-Tipped, Finger Grip Groove Bits, Round, 2-Flute
1/2" Shank *for 1-1/4" boards....~~$54.17~~* **$46.99**
1/4" Shank *for 3/4" boards....~~$48.05~~* **$39.99**
1/4" Shank *for 1" boards....~~$51.93~~* **$43.99**
More Router Bits are available on ***Woodpeck.com***

Flat Top Grooving Saw Blades

ULTRA·SHEAR® by Woodpeckers

When you need flawless, flat-bottomed cuts, our 40-Tooth Flat Top Grooving Blade delivers. The chisel tooth design yields a perfectly square groove.

10" x 40 Flat Top Grooving Blade, 5/8" Arbor
1/8" Kerf....~~$166.78~~ $129.99
3/16" Kerf....~~$186.83~~ $149.99
1/4" Kerf....~~$196.86~~ $179.99
Other Saw Blade options available on ***Woodpeck.com***

Visit ***Woodpeck.com*** *for hundreds of other American Made Tools!*
Woodpeckers, LLC • Strongsville, Ohio • 800-752-0725
Prices are subject to change without notice.

Also Available at Your Local Woodcraft Store! WOODCRAFT®

FUJI SPRAY D6 SPRAYER

If you're a regular reader of *Woodsmith*, then you'll know that we often use spray-on finishes for our projects. There's two major reasons for this. First, spraying is usually the best way to achieve an even finish. Second, it's quick, and with the number of projects we create for each issue, it's certainly worth the investment for us. Of course, the drawback to spraying on finishes is that you'll need to buy a sprayer. However, if that's an investment you're looking to make, then *Fuji Spray*'s new D6 Sprayer is certainly worth consideration.

SIX-STAGE TURBINE. The D6 Sprayer gets its name from its six-stage turbine. As you can see below, the stages can easily be switched by pressing a button on the interface. The low stages are useful for thin liquids like dyes and stains that don't take much pressure to spray. On the other end, the upper stages work to apply catalyzed lacquer or latex paint. This is a high-volume low-pressure (HVLP) sprayer, so there's no need to thin paint or other finish before applying it — just fill the can and spray.

T70 SPRAY GUN. There are a couple choices of spray guns that you can purchase from *Fuji* alongside the turbine itself, and we decided to go with the bottom-fed T70 Spray Gun. With a one-quart capacity, this was the clear choice given the size of projects we usually need to finish.

PERFORMANCE. In terms of function, *Fuji*'s products don't disappoint. The turbine provides plenty of power on each setting. Having a total of 31' of hose means I never need to move the turbine as I finish a project, and the remote allows me to start and stop without needing to walk back to it. The T70 Spray Gun has fan pattern and volume adjustments that make it simple to eliminate overspray. So, if you're looking to make the investment in spraying, the D6 Sprayer is a quality choice.

▲ The six-stage turbine allows the sprayer to apply a number of finishes from stains and dyes to paints and lacquers.

▲ The adjustable head allows you to spray horizontally or vertically without contorting your wrist.

GRID ROUTER GUIDE

As I mentioned earlier in this article, the MatchFit line of products from *MicroJig* revolves around the use of dovetail tracks. I've been a fan of this design, as they work well for a variety of operations, from handheld routing to table saw jigs. However, they do require one to have dovetail tracks in the first place, which is where the guide you see here comes in.

This guide is made to attach to baseplates that accept *Porter-Cable* style bushings. As you can see at right below, a cleat along the bottom of the guide allows it to follow the edge of a workpiece and the subsequent slots it routs. Using this to make a worksurface or spoilboard (like you see below and on pages 22 and 23) is a simple, two-step process.

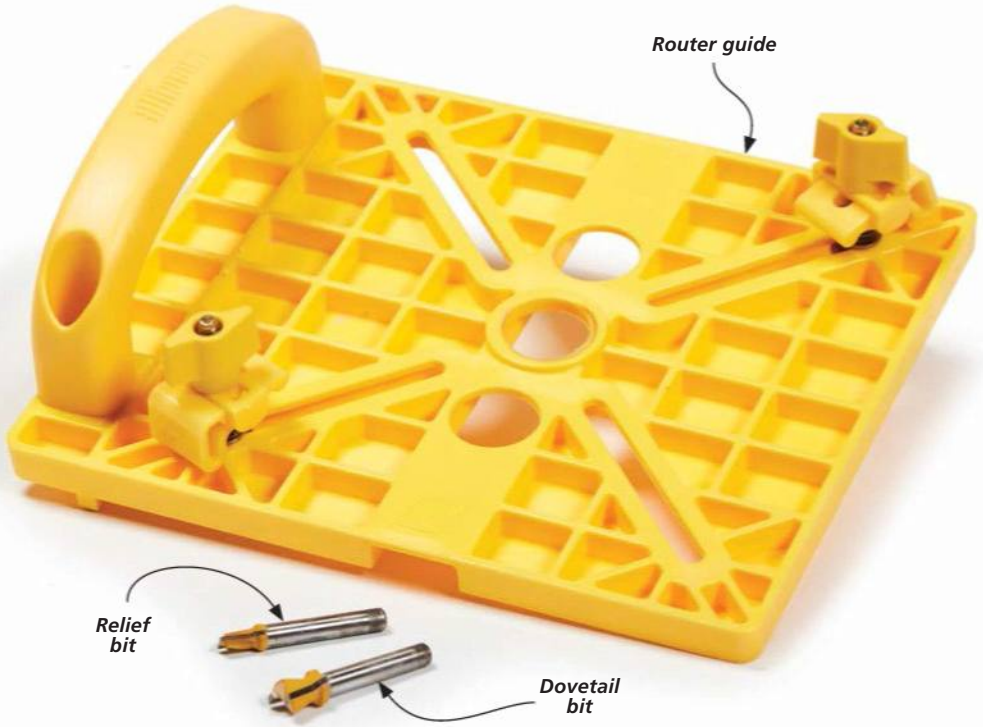

RELIEF SLOT. Using this guide begins with the relief bit. This bit clears out most of the waste, providing a slot for the cleat to follow as you make the grid while also making it easier for the dovetail bit to cut a clean slot.

After chucking in the relief bit and attaching your router to the guide, you'll start by making one pass with the cleat following the edge of the workpiece. After this first cut, reposition the router and guide to have the cleat follow the slot you just made. This process is repeated across the workpiece, and, once you've finished one direction, you'll rotate the board and repeat to create the grid (middle photo).

DOVETAILING. Once you've created the grid, the next step is to expand those slots into dovetail tracks. Remove the router from the base and guide, chuck in the dovetail bit, reattach the base, then begin routing in the opposite order you made the slots. The reason for this is that the dovetail bit slightly widens the relief slot, meaning you'll need to have the cleat in a relief slot while routing to maintain the same distance between the cleat and the bit for each cut.

In my opinion, this grid router guide is an excellent addition to *MicroJig*'s MatchFit lineup. While they offer the dovetail bit to match their hardware separately, the guide makes creating a surface for their hardware far easier. By cutting the grid into a sheet of MDF, I can create an easily replaceable worksurface or spoilboard for my projects in a matter of minutes. W

▲ The router guide registers against the edge of the board for the first cut, then off of the previous slot to ensure consistent spacing.

▲ The grid is first made by routing out slots with the relief bit. This removes most of the waste for a clean dovetail later.

▲ The dovetail bit expands the slot into a dovetail track. You'll cut this in the opposite order you cut the relief slots.

portable Tool Stool from ShopNotes

There are a few ways to define "portable" when it comes to shop gear. The most familiar is a grab-and-go concept associated with cordless drills or tool totes. The stool you see here works on a different aspect of portable. It's designed for site work — think shop in a box.

The drawing and photos on the next page lay out some of the features. Drawers and an upper till keep necessary tools and supplies close by and organized, like a mini tool chest. The two-piece top turns the unit into a stout, low workbench (complete with miter station). Between tasks, you can sit down for a snack and drink as you ponder the next move.

BALANCING ACT. It's tough to get portability and the features I just highlighted to play well together. Design editor Dillon Baker found inspiration in the work of Charles Hayward and other English craftsman of the early 20th century. The project is made from southern yellow pine for its own balance of light weight and stoutness. Varying the part thicknesses trims drawers and dividers to lean necessity.

ESSENTIAL JOINERY. Dadoes and grooves along with well-placed mortise and tenon joinery share the same construction as any heavy-duty workbench. Here's what this all means: a few pleasant evenings in the shop reward you with a smart-looking solution to turn an away game to your advantage.

Written by: Phil Huber; Project Design: Dillon Baker

Exploded View Details

OVERALL DIMENSIONS:
14⅞"D x 26½"W x 16"H

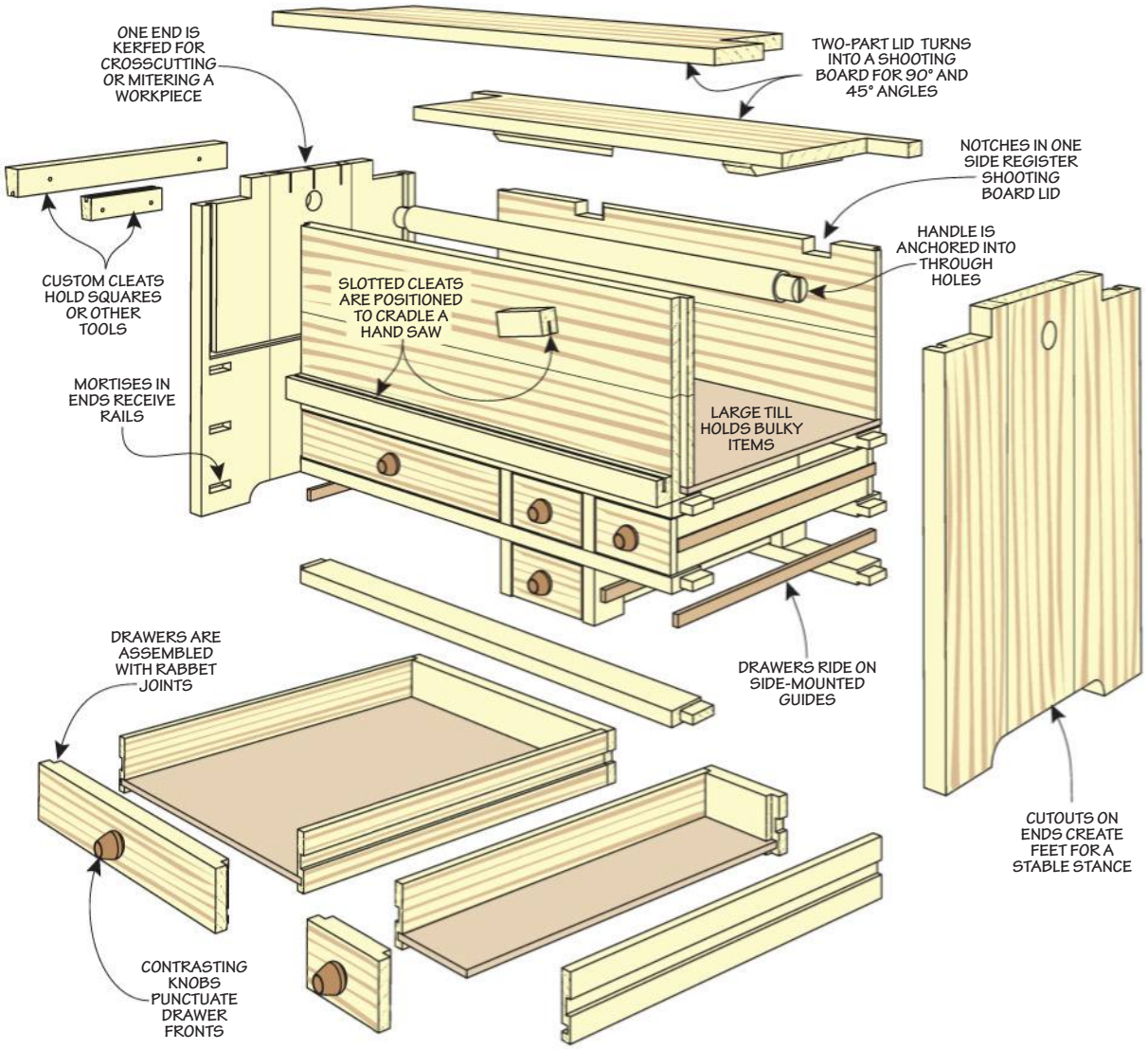

▲ Take the lid off to reveal the upper tool till and a thick walnut dowel that allows you to carry the stool from place to place.

▲ The stool is just the right height to work as a saw bench (as shown), an assembly area, or a place for a well-earned break.

▲ Solid-wood construction and rugged joinery mean you can confidently stand on the stool for overhead tasks.

Illustrations: Dirk Ver Steeg

FIGURE 1

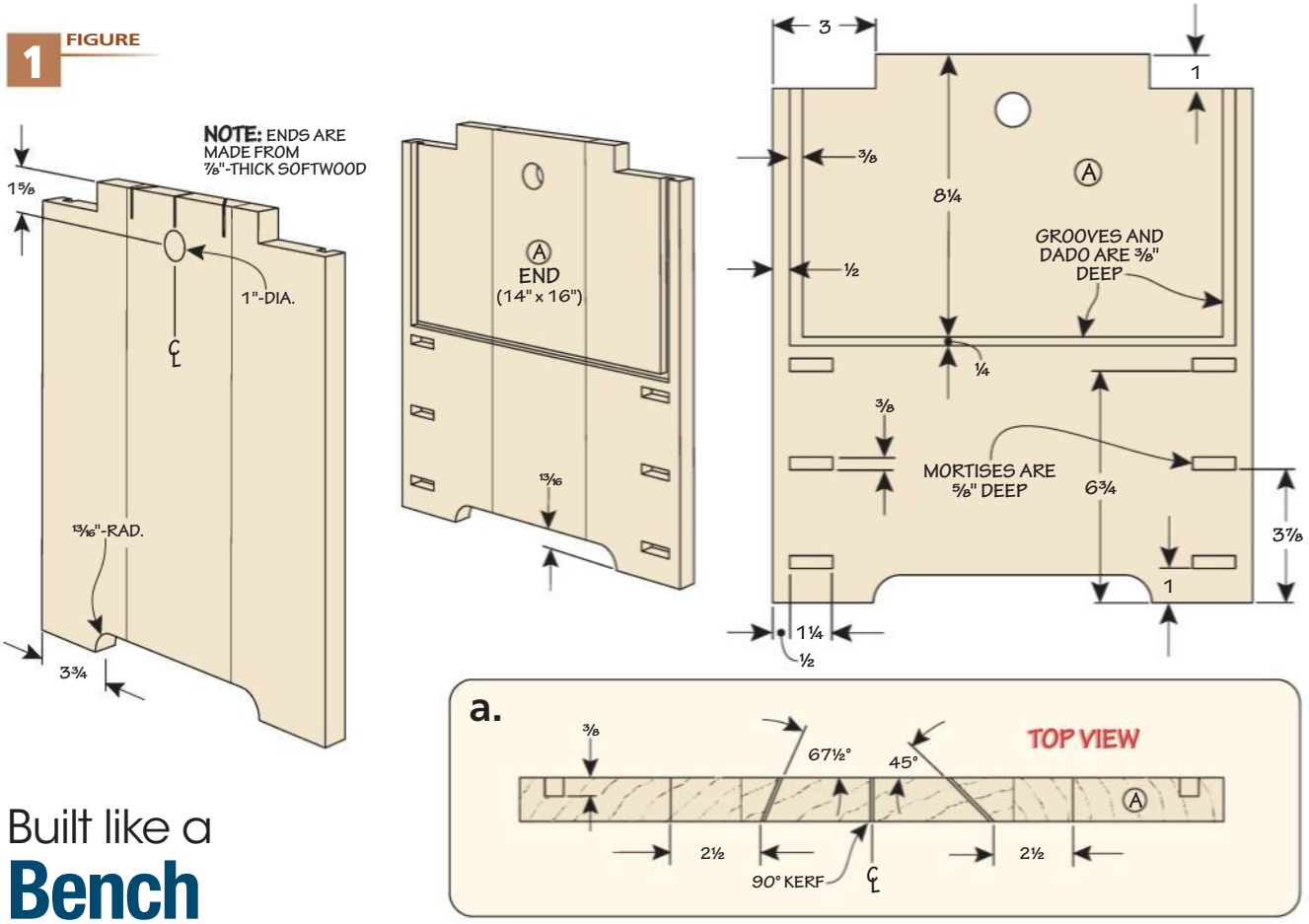

Built like a **Bench**

While looking over the plans for this project, I kept thinking of other projects this reminds me of. However, there's one piece of furniture that helps in understanding the construction of this one: a blanket chest.

The large compartment above a set of drawers mirrors one version of the blanket chest, sometimes called a mule chest. Figure 1 shows the final shape of the ends, but a pair of matching rectangular blanks is the first stage.

JOINERY MENAGERIE. The inside faces of the blanks house joinery excavations: mortises for the drawer system. Grooves and dadoes house the upper compartment.

I worked from the bottom up. The mortises are cut as deep as possible without breaking through the face, as shown in the upper right elevation. There are several approaches for making the mortises. Considering the dadoes and grooves that lie ahead, I opted for a plunge router and guides to tackle it all.

Careful layout is a must. I taped a straightedge across the face to keep pairs of mortises aligned. Step your way down to final depth. The rounded corners left by the bit require some chisel work to square them up.

Keep the bit, but switch to an edge guide to rout the stopped grooves along the edges. Figure 1a has the depth dimension for these cuts. Then it's back to a taped guide (and a smaller bit) to form the dado that connects the grooves.

HOLES & SOLES. Take a moment to sweep up the chips. Then take a trip to the drill press to make even more chips, this time with a Forstner bit. Drill the hole for the handle.

Cutouts on the bottom of the sides create feet for a stable stance to this tool stool. I used a smaller Forstner to drill out each end of the cutout. This adds a welcome curve to the appearance. Connect the radii with a cut at the band saw (Figure 1). I use the rip fence to keep this cut straight. The blade tucks into the drilled end easily. Clean up the cut with a sanding block.

You might as well get comfortable at the band saw. At the top of the end, a notch cut along either edge creates a tab that registers the lids that come later. This is detailed in the upper right drawing. Figure 1a shows a fun feature on one of those tabs. I cut three kerfs with a back saw: 67.5° (for eight-sided work), 90°, and 45°. A ledge added later creates a small parts miter box. Feel free to use the angles that suit your needs.

THE TILL

The upper compartment is called a till in some chests. For this stool, it's made up of three parts, as you can see in Figure 2 on the next page. A pair of sides join with a floor.

All the joinery work occurs on the sides of the till. The first task is to cut a rabbet on each end. This forms a tongue that needs to fit into the grooves in the sides, as shown in Figures 2b and 2c. The lower edge of the tongue is notched to fit the stopped grooves, with the upper surface sitting flush with the upper edge of the end. I did this with a backsaw.

With the side dry fit, mark the location where the dado meets the side. This identifies where you need to cut a groove to house the floor. Figure 2a shows the perfect world dimensions.

FIGURE 2

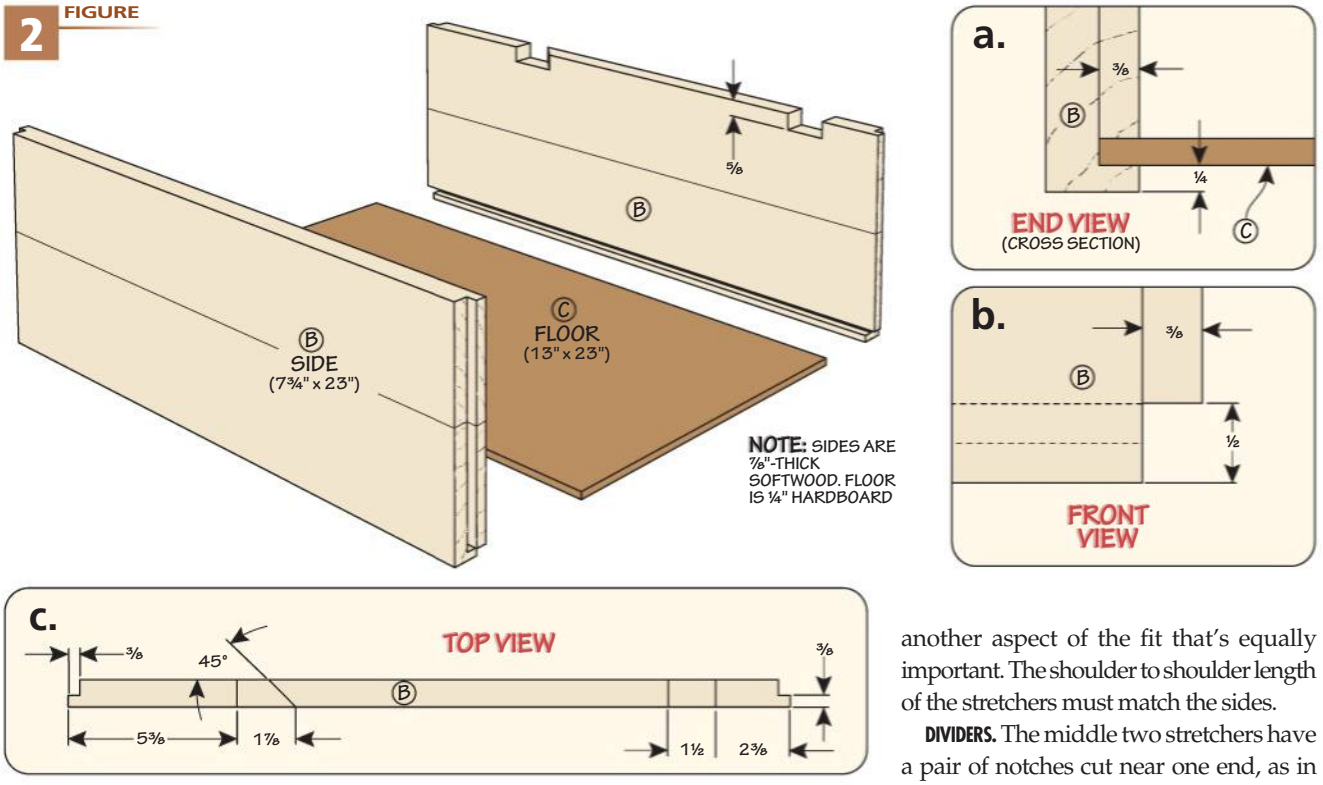

CURIOUS NOTCHES. Along the top edge of one of the sides, you'll notice a pair of notches (Figure 2). These accept a set of blocks attached to the underside of the lid panel. Take my word for it that it will make sense later.

One more time, dry fit the sides into one of the ends to determine the size of the floor. Then cut it to slide in easily. A little slop side to side allows for the seasonal movement of the ends. Set these parts aside for now.

STRETCHER TEAM. Figure 3 below reveals the final case parts needed for the stool. Six stretchers and four dividers create compartments for the drawers as well as add robust structure.

The stretchers have a tenon on each end to fit the mortises you made earlier (Figure 3a). As important as that fit is, there's another aspect of the fit that's equally important. The shoulder to shoulder length of the stretchers must match the sides.

DIVIDERS. The middle two stretchers have a pair of notches cut near one end, as in Figure 3c. These accept the dividers that frame the openings for the smaller drawers. Fit the stretchers into the ends to verify both the length of the dividers as well as the location of the mating notch you need to cut in each divider, as you can see in Figure 3b. Resist the temptation to glue these ... for now.

FIGURE 3

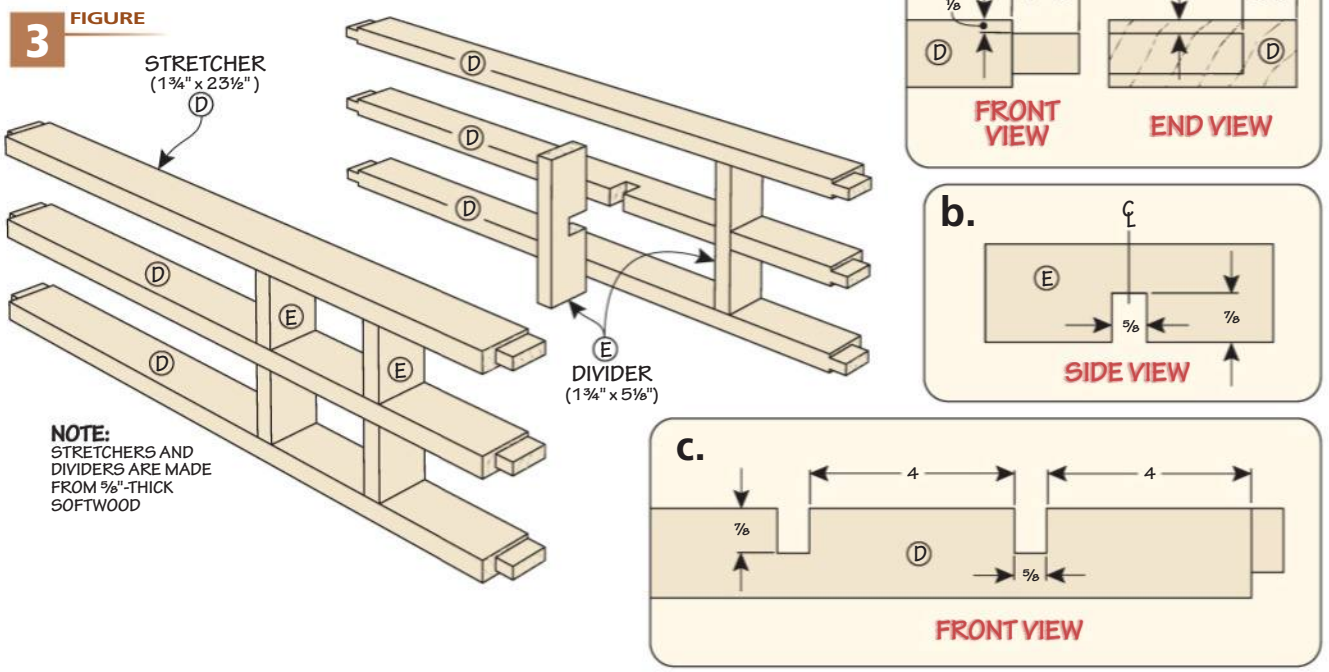

FIGURE 4

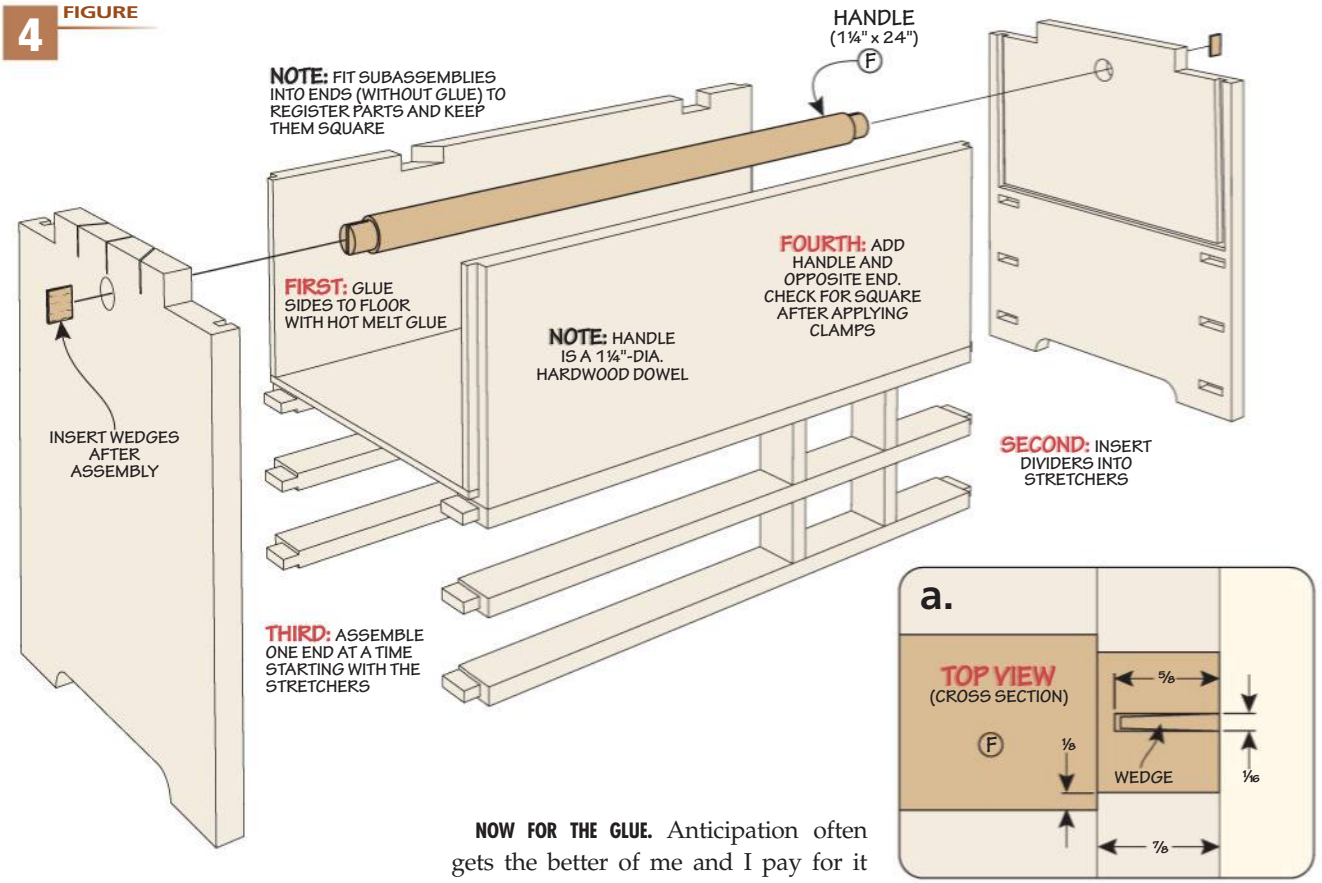

Get a Handle on **Assembly**

There remains one piece left to make before the glueup. You can see it in Figure 4 above. It's the handle. I selected a hefty walnut dowel. Spend a little time sighting down the selections to find the straightest one. Keep an eye on the grain too. You want it running from end to end, or at least with a minimum amount of grain runout.

Back in the shop, the next task is to form a tenon on each end to fit the holes in the ends, as in Figure 4a. I used a straight bit in the router table for this. Hold the dowel against a miter gauge (or a square backer block) and rotate it across the bit. I aim for a snug press fit.

The final step is to cut a slot in each tenon for a wedge. You can do this at the table saw, band saw, or with a hand saw. I chose hand saw, in case you were wondering. Make a few wedges while you're at it with some scrap material. By the way, a set of contrasting wedges would look nice here.

NOW FOR THE GLUE. Anticipation often gets the better of me and I pay for it with a frantic assembly session. For this stool, a thoughtful approach and a plan reduces the alert status.

For starters, Figure 4 shows a few subassemblies: the till and the stretchers. I mentioned earlier that the floor floats in the grooves. To reduce the number of parts to juggle, I connected the ends, sides, and floor without glue. Then I added beads of hot melt glue underneath where the floor meets the sides. Once the glue hardens you can carefully remove the ends.

STRETCHER GLUEUP. A similar approach works for the stretchers and dividers. Fit all the stretchers in the mortises and clamp the case square (still no glue). At this point, glue the dividers into their notches. If you have a brad nailer, you can fasten the dividers to the top and bottom stretchers with a couple brads from each direction. After 30 minutes or so, you can remove the ends.

IT'S GO TIME. Work one end at a time when you're ready for the final stage. Apply glue to the grooves and the middle third of the dado. I butter the tenons with glue. Fit these into one of the ends laying face down on the workbench.

Add glue to the opposite ends of the sides and stretchers. Don't forget to slip the handle in place. Finally, add the opposite end.

Place the stool upright on a level surface and apply clamps. Examine a few places to ensure the assembly is square. This is the time to tap in the wedges pinning the handle in place. Then step away for a well-earned break.

AN ARRAY OF DRAWERS

As inviting at the till is for flexible storage, know that small items will disappear in its depths. That's why Dillon included a set of drawers below, as you can see in Figure 5 on the next page. Four narrow drawers are handy for long tools or smaller containers of fasteners. Two larger drawers open up more opportunities.

JOINERY BASICS. The drawers are joined with rabbets. They slide on runners installed in the stool.

Size the sides, fronts, and backs are 1/8" smaller than the opening. Cut rabbets on the fronts and backs to hold the sides, as you can see in Figure 5d. The sides

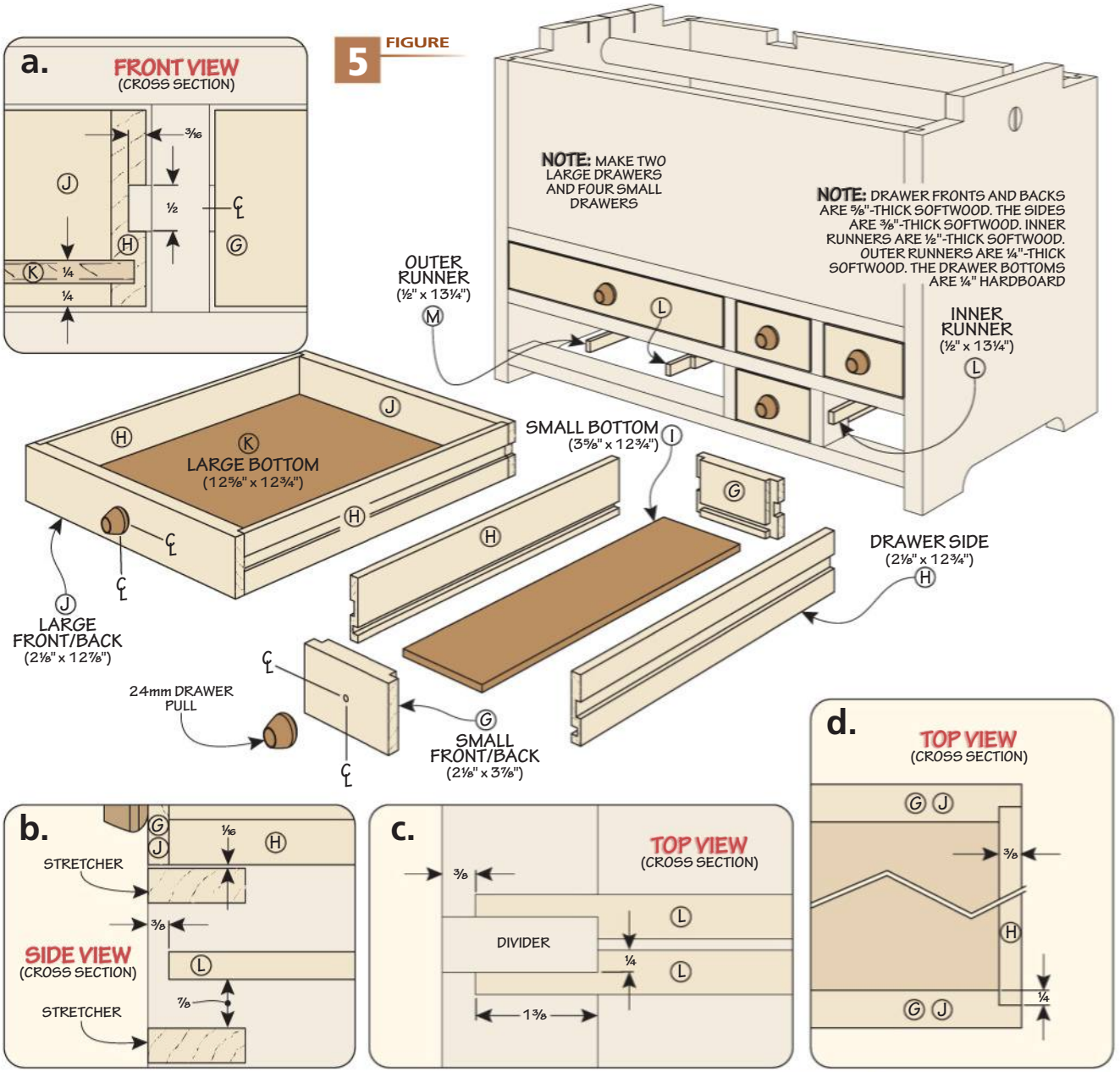

receive a centered groove on the outside face, as in Figure 5a. With these details cut, set up to cut a groove on the lower inside edge for the drawer bottoms.

When the bottoms have been sized, you can glue up the drawers. Here again, flat and straight remain priorities. When the clamps come off, use a back saw and a chisel to connect the groove through the drawer back.

For pulls, I found walnut knobs that complement the handle. Find out where to purchase them in sources on page 66.

RUNNING GAME. The construction of the stool up to this point has been straightforward. But some of the trickiest patches lie ahead. Not for any complexity. More for its tight confines of the work area. You need to make and install a pair of runners on the inside of each of the three drawer compartments.

Start with cutting the runners to size. Take note that there are two different thicknesses of runners. The interior runners are thicker than the outer ones.

I aim for a smooth sliding fit in the drawer grooves with little slop. The ends of each interior runner have a long, shallow rabbet cut in to wrap around the dividers, as shown in Figure 5c.

In order to install the runners, I cut a spacer for the runners to rest on. Figure 5e shows the set back for the runners. I used small brads or pins to tack a pair of runners in place to make sure the spacer is the correct width.

Once it's dialed in, you can install the runners. For once, this calls for a fast-setting glue and some small 23-ga. pins to speed up the process.

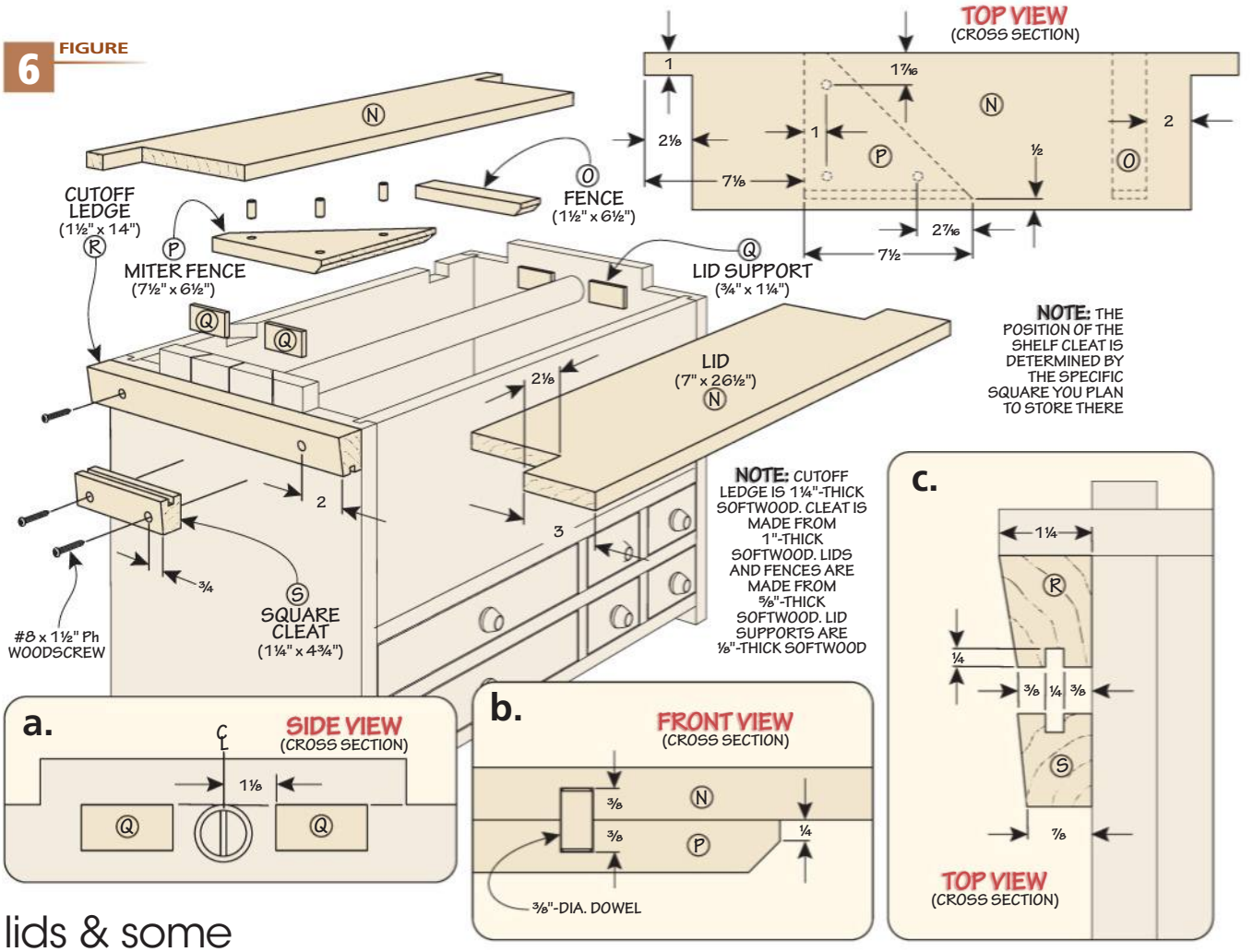

lids & some
Fun Features

Until now, we've been focused on structure and storage. It's time to go from the base model to deluxe. Lids turn this project from a tote into a stool. Then a few details boost the functionality.

PUT A LID ON IT. Two lids cap the project. They're identical in size, but differ in the detailing, as you can see in Figure 6 and the Top View drawing.

The lid that has the deeper notch cut into it, also houses a pair of fences. This transforms the lid into a shooting board for hand plane work. This lid is flipped over onto the other. A hand plane rides on the lower lid while the blade trims a workpiece supported on the second one. You can see this in the center and right photos below.

The way the fences are position provide a purpose to the notches cut in the side earlier in the construction. I used

▲ Adding a ledge to one end creates a miter box for cutting small pieces accurately with a back saw.

▲ Flip one lid over the other to set up a shooting board that that makes quick work of trimming the ends of parts.

▲ A miter fence on the other end allows you to trim molding and frame pieces to length or to adjust the angle.

▲ Tool holders can be as simple as strips of wood with a kerf running down the length to hold a hand saw.

FIGURE 7

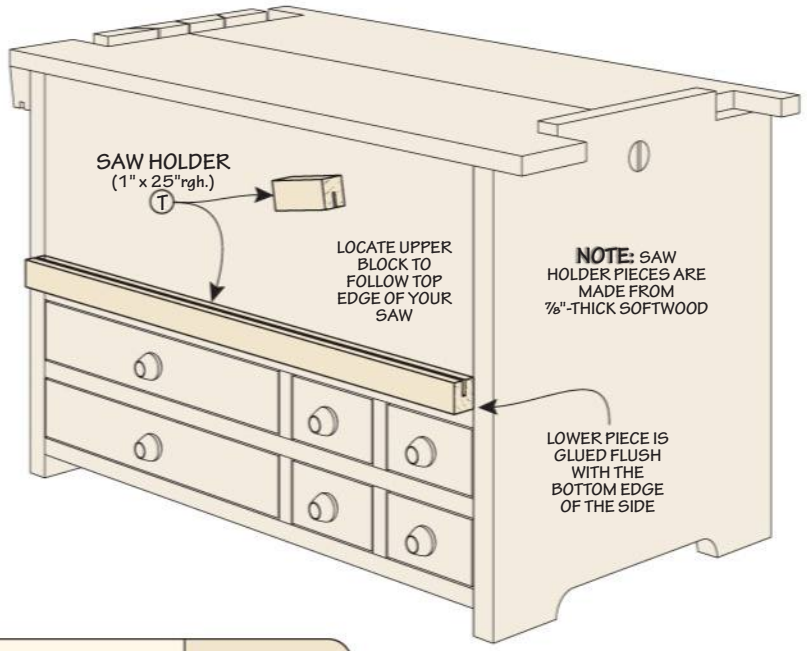

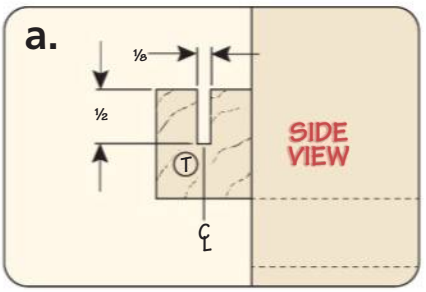

dowels to register and anchor the miter fence for a secure connection. Glue and brads secure the 90° fence.

In the stool configuration, the lids are supported by a pair of cleats glued to the inside of the till, as you can see in Figure 6a. For transport, tuck the lids upright along the sides of the till.

SQUARE HOLDER. The miter box kerfs cut into one of the ends require a way to hold the workpiece. I made a ledge to serve that purpose.

Then I got to thinking. Why not have the ledge pull double duty? So I cut a kerf along the lower edge to accept the blade of a square, as in Figure 6c. A bevel planed on the outer face provides a little visual flair. The ledge is screwed to the end flush with the notches (Figure 6).

To counteract gravity, a cleat below the ledge is necessary to hold a square. It also has a kerf and bevel, as in Figure 6c. The spacing between the ledge and notch is determined by the width of the blade on your square.

SAW HOLDER

Even though the till and drawers provide plenty of storage, the outer surfaces of the stool offer a blank canvas for easy-access. I want to highlight one more option: a hand saw holder. You can see the idea in the upper left photo.

Figures 7 and 7a shows the details. I made an extra-long blank and cut a kerf with a regular table saw blade. The blank gets cut into two pieces. One long piece is glued to the side just above the drawers. A second shorter piece captures the blade of the saw from above. Here again, the specific location will depend on the saw you have.

Based on these holders, you can see I lean toward hand tools — even in my home projects. However, simple holders like these could be made for cordless drills, a jig saw, or any other tools that are vital to your on-site work.

A couple of coats of wiping varnish are all that this stool needs for basic protection. Working away from my shop often means giving up some features and comforts. Building this stool should return some shop-like advantages.

materials & hardware

A	Ends (2)	⅞ x 14 - 16
B	Sides (2)	⅞ x 7¾ - 23
C	Floor (1)	13 x 23 - ¼ Hdbd.
D	Stretchers (6)	⅝ x 1¾ - 23½
E	Dividers (4)	⅝ x 1¾ - 5⅛
F	Handle (1)	1¼ x 1¼ - 24
G	Small Fronts/Backs (8)	⅝ x 2⅛ - 3⅞
H	Sides (12)	⅜ x 2⅛ - 12¾
I	Small Bottoms (4)	3⅝ x 12¾ - ¼ Hdbd.
J	Large Fronts/Backs (4)	⅝ x 2⅛ - 12⅞
K	Large Bottoms (2)	12⅝ x 12¾ - ¼ Hdbd.
L	Inner Runners (8)	½ x ½ - 13¼
M	Outer Runners (4)	¼ x ½ - 13¼
N	Lids (2)	⅝ x 7 - 26½
O	Fence (2)	⅝ x 1½ - 6½
P	Miter Fence (1)	⅝ x 7½ - 6½
Q	Lid Supports (4)	⅛ x ¾ - 1¼
R	Cutoff Ledge (1)	1¼ x 1½ - 14
S	Square Cleat (1)	1 x 1¼ - 4¾
T	Saw Holder (1)	⅞ x 1 - 25 rgh.

- (3) ⅜"-dia. x ¾" Dowels
- (6) 24mm Walnut Pulls w/Screws
- (4) #8 x 1½" Ph Woodscrews

Written by: Erich Lage; Project Design: John Doyle

6 Drawer Dresser

Who says practical has to be boring? This dresser is made mostly with plywood and pocket screws — there's no shame in that. It will still have a long life of dependable use.

I've often thought plywood projects such as the dresser you see here get a short shrift when compared to its all-wood counterparts. It's sort of like Dana Carvey's grumpy old man character that used to be on *Saturday Night Live*. "Yea! Every board we used had to take account of wood movement! Yea! And we liked it!"

Designer John Doyle used cherry plywood for good-looking side panels. Plywood does more than give you a pretty face. Inside, panels create a stout structure. This arrangement simplifies the construction, getting you to the finish line quicker than you might have imagined.

It's possible to go overboard in both these aspects. Flat expanses of plywood can look boxy. John counteracts this with hardwood applied strips and thick legs. The result is a look that resembles traditional construction practice.

Too many solid panels inside creates a project that you'd need a pallet jack to move around. Instead, narrow pieces create a rigid framework minimizing additional weight. Looks like it's time to head to the lumberyard and start sorting through plywood sheets.

▼ Large, centered bin pulls allow you to open any of the drawers with just one hand.

▲ Full-extension drawer slides are a welcome surprise for a traditional looking project. They offer years of smooth, dependable service.

Illustrations: Harlan Clark

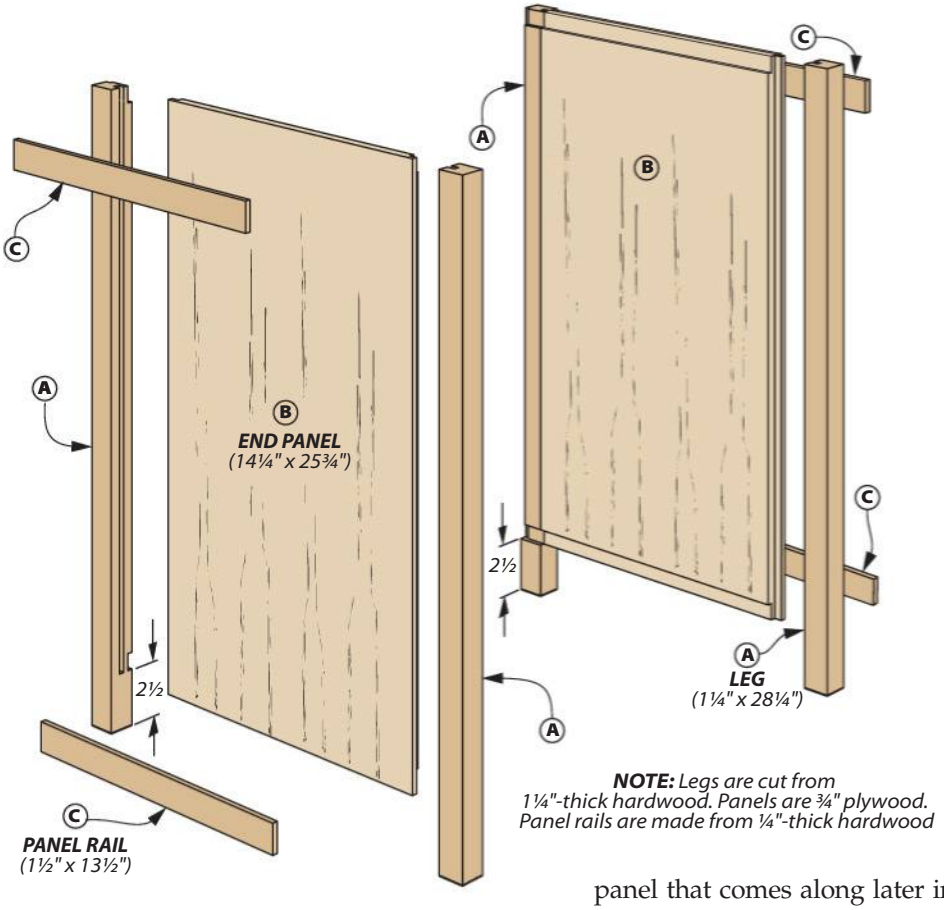

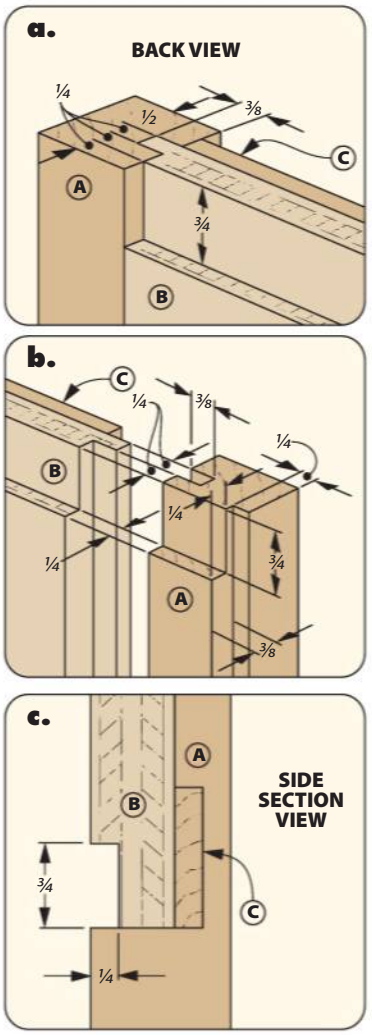

Sturdy Post & Panel ENDS

One of our goals is to make this dresser look beautiful rather than like plywood. You see a few strategies at work in the end assemblies shown above. Each assembly consists of a pair of hardwood legs joined by a plywood panel. Thin rails give the appearance of a frame and panel.

The construction is more accurately a post-and-panel arrangement. It's the joinery between these two elements that we'll get to first.

RABBETS & GROOVES. The four legs are identical in size. Their treatment differs however. Details 'a' and 'b' take care of the numbers and also reveal what's going on.

First up is a stopped rabbet cut into the two back legs. The rabbet holds a thin plywood back panel that comes along later in the construction process. The box on the bottom of the next page shows the setup for doing this at the router table.

Keep in mind that the two legs are mirror images. So on one leg, you'll start the cut at one end then stop short of the end of the leg. On the other, you need to pivot the leg into the bit, then rout through the end, as shown in Figure 1 on the next page.

Swap out bits, but keep the idea for a stopped groove you cut along the inner surfaces. All four legs receive this groove. You can see this in Figure 2.

There's one final pair of cuts to make on the back legs. There's a rabbet on the top and a dado a few inches up from the bottom. I didn't mention them earlier, since I cut these at the table saw. The width matches the thickness of the plywood for the case subtop and bottom. The locations are shown in the drawing above and in details 'b' and 'c.'

PLYWOOD PANELS. The legs stand ready to accept the panels. Rabbets comprise the work you need to do on the panels.

A rabbet cut on each end of the panel aligns with and matches the rabbet and dado in the back legs. You can do this on the table saw using the same dado blade setup you used on the legs.

The other rabbets run along the edges of the panels. The size and width of these leave a tongue that fits into the groove in each leg (details 'a' and 'b').

DRESS UP. Grab the glue bottle and clamps to assemble the ends. As you fit parts, keep the rabbets on the panel aligned with the rabbet and dado on the rear legs. The other bit to watch out for is that the tongues on the panel seat fully in the legs.

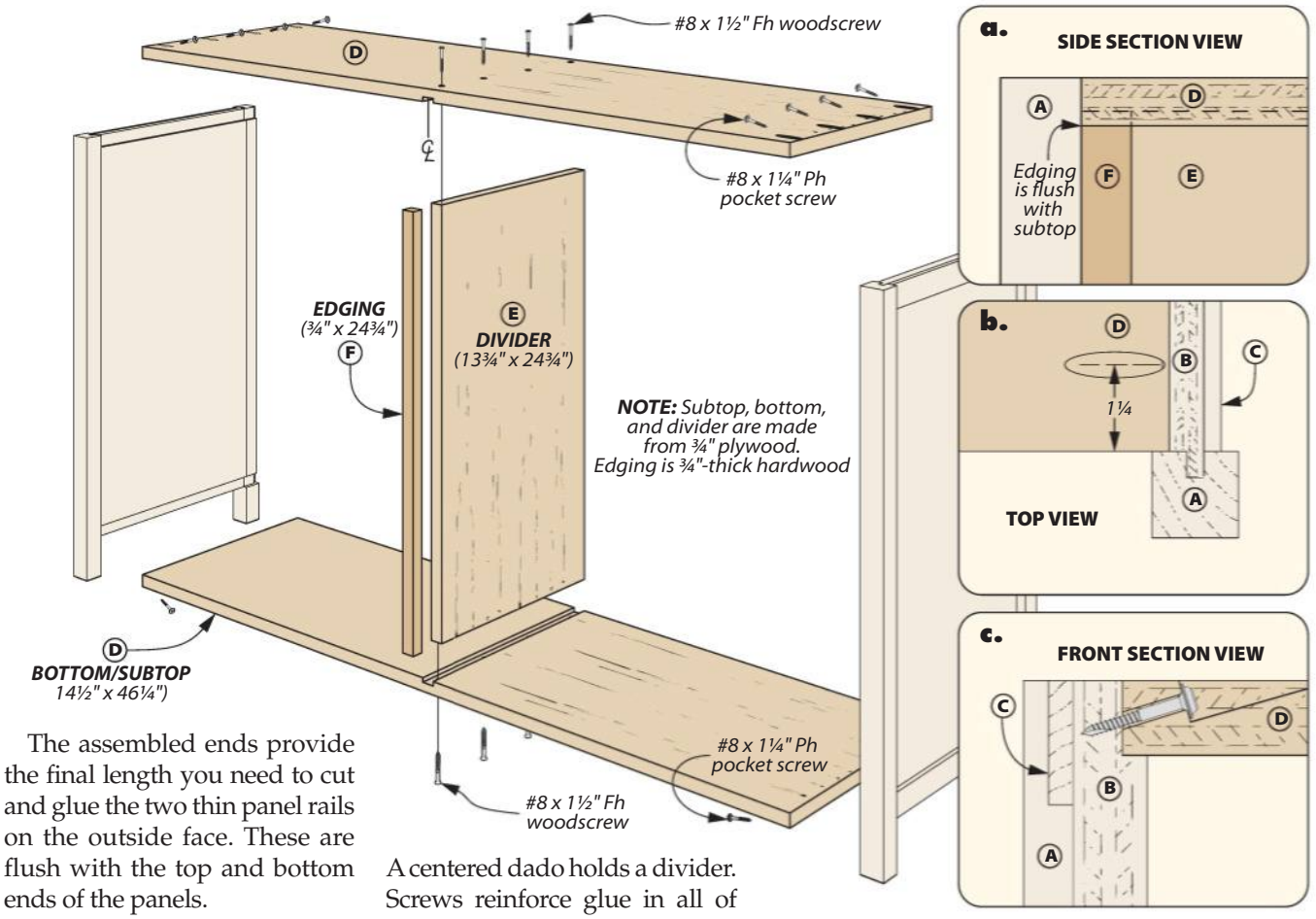

The assembled ends provide the final length you need to cut and glue the two thin panel rails on the outside face. These are flush with the top and bottom ends of the panels.

TOP, BOTTOM & DIVIDER

Three plywood panels round out the casework on the dresser, as you can see in the drawing above. They form two bays that will house the drawers.

POCKET SCREWS. The subtop and bottom are identical pieces. A centered dado holds a divider. Screws reinforce glue in all of the connections here. Pocket screws pull the subtop and bottom into the rabbets and dadoes in the ends, as shown in detail 'c' at right. The dimension shown in detail 'b' is there to keep the screw hole far enough from the edge so that the plywood won't crumble as you drive in a screw.

DIVIDER. The divider is narrower than the subtop and bottom. It has a strip of hardwood applied to the front edge. Then it can be slipped into the dadoes from the front. Glue in the front part of the dado gets spread as the panel slides in, then add screws.

STOPPED GROOVES & RABBETS

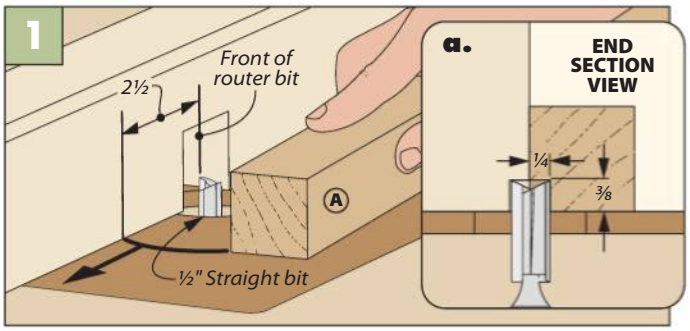

Rabbet. On the rear left leg, you need to pivot the workpiece into the bit to begin cutting the rabbet.

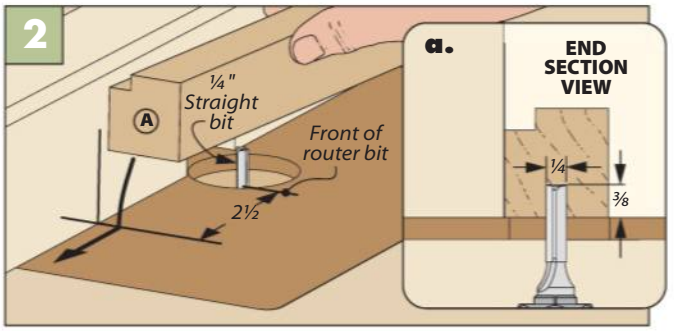

Grooves. All the legs receive a groove for the end panels. The groove stops before reaching the bottom.

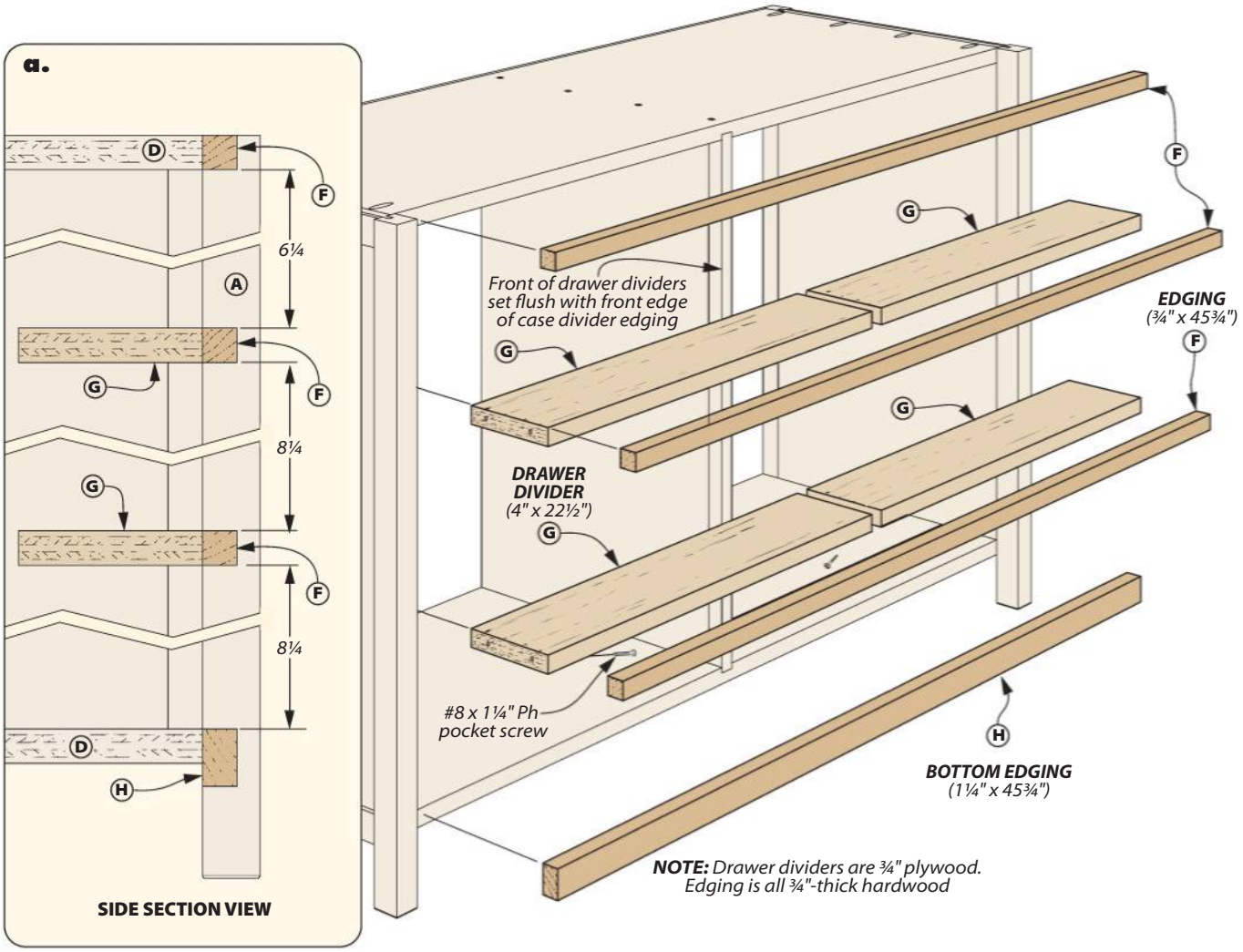

Complete the casework
TRIM PACKAGE

Modern cabinets that employ full-extension drawer slides often dispense with interior dividers. Their goal is saving expense. To my eye, the lack of dividers looks incomplete. I feel that the case is weaker, too.

John agrees. So the two compartments of the case are further divided into smaller openings for each drawer. This doesn't mean these need to be full plywood panels. Nor are we talking about traditional web frames.

DRAWER DIVIDERS. Instead the drawing above shows dividers that extend into the case a few inches. These drawer dividers are made from plywood. They'll never be seen. Feel free to use leftover pieces. The cherry hardwood edging you make in a bit covers the edges.

Pocket screws join the dividers to the case. I drilled a pair of pocket holes on each end. Drilling the holes on the underside of the dividers keeps them hidden from view. To be honest, once the drawers are in place, you wouldn't see them anyway. It's still a cleaner look.

To establish the location of each divider, cut a pair of spacers. Detail 'a' gives you the concept. I worked from the top down. Clamp a spacer to the case divider and another to the end in order to drive the screws.

The divider tucks in right behind the leg on one side. On the other end, the divider sits flush with the front edge of the case divider's edging. You can see this in detail 'a.'

The next spacers you make need to divide the remaining space in half. The goal is to end up with the lower four openings all at equal heights.

When all of the dividers are installed, it's time to cover the exposed plys on the front of the case. Three long, narrow strips cover the edges of the subtop and drawer dividers. They pass across the case divider, as shown in the drawing above. Cut these for a tight fit end to end. I like to make them a bit too long and spring them in place. This way the seams on the ends are as tight as possible.

The edging covering the bottom is cut wider. This creates a grounded appearance common in traditional face frames.

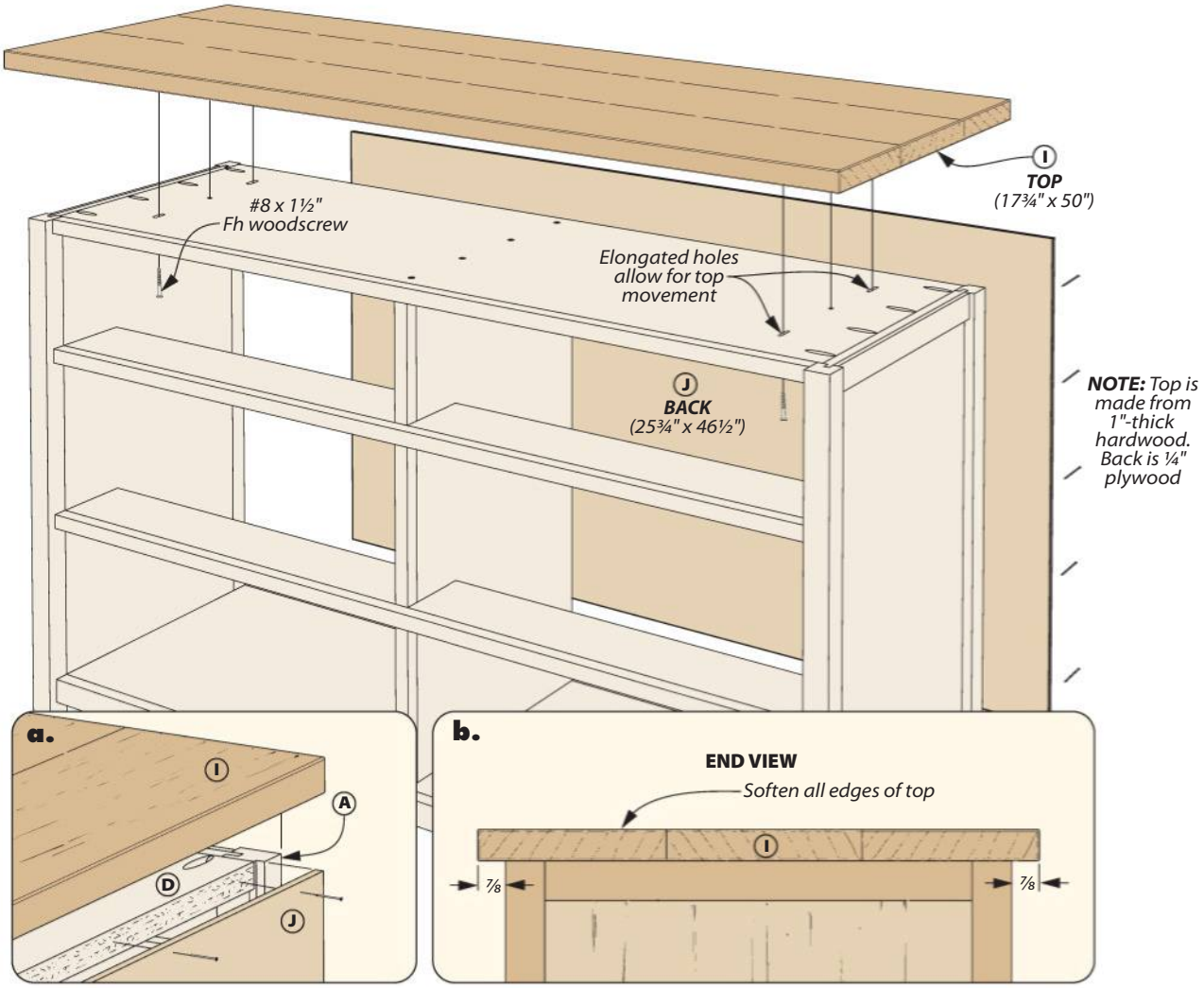

TOP & BACK

It takes a lot to make a case top not look like plywood. The better option is to go with a solid-wood, glued-up panel.

I spend the most time at a lumberyard sorting the stacks for boards that end up as the show-piece of a project. For this dresser, that's the top. The drawer fronts are a close second. Since the top is wide and long, these boards are harder to come by.

The drawing above shows a three-board glueup. If you have access to wide stock, you can get by with a two-board panel. Also, I'm a little jealous.

The final width of the top is too wide for most planers. This means keeping the boards aligned is top of mind. The box at right shows how thick clamping cauls are your friends when it comes to a panel assembly.

The top is centered on the case, as shown in detail 'b.' Screws in oversized holes allow the top to expand and contract with changes in seasonal humidity.

That just leaves the back. This plywood panel is cut to size and nailed into its recess (detail 'a').

PANEL GLUEUP

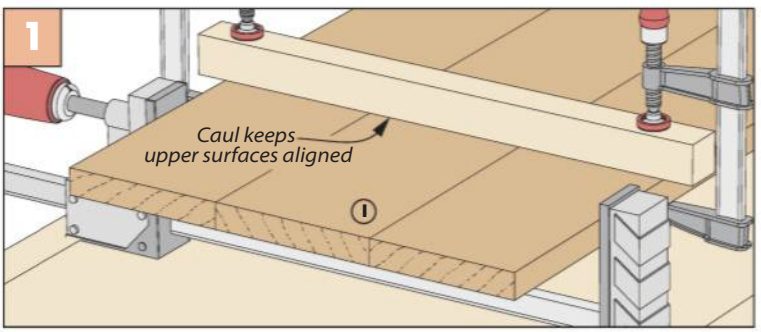

Clamping Cauls. Wax the bottom edge of hardwood cauls to prevent you from gluing the caul to the top.

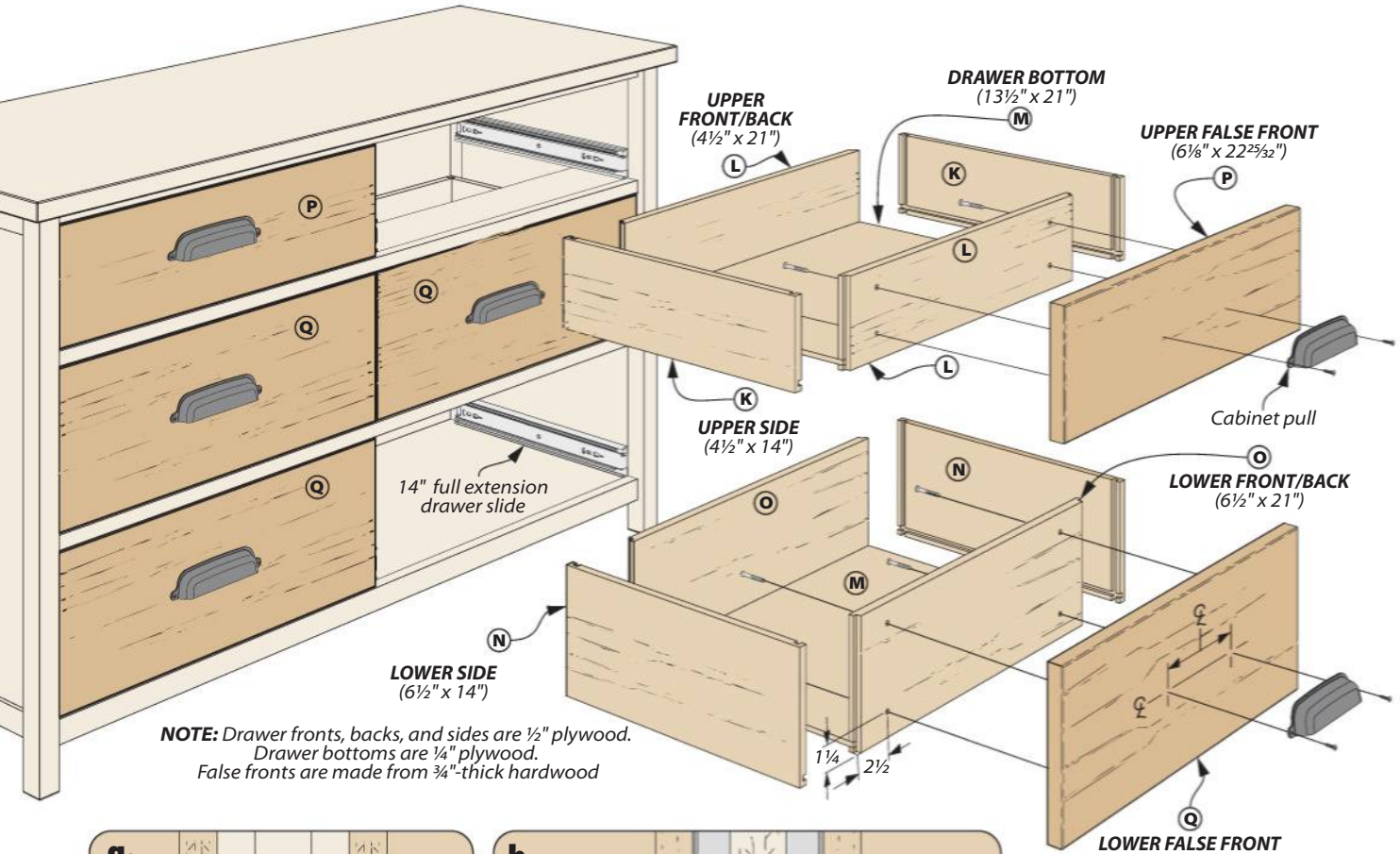

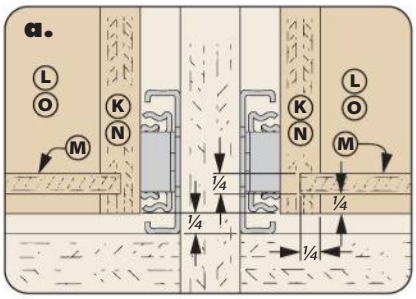

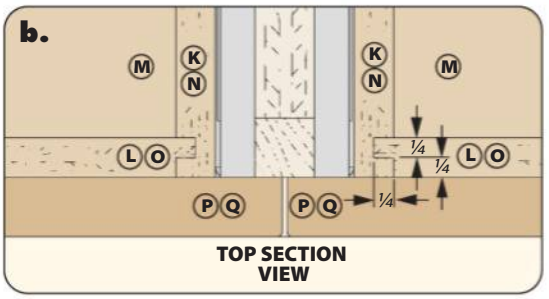

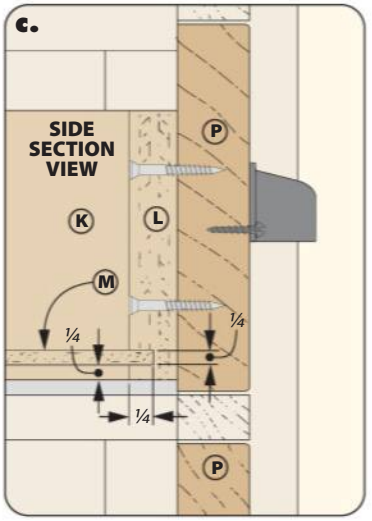

Wrap it up with DRAWERS

Drawers define a dresser. This one has six generously sized drawers. There's a bland uniformity in dressers with an array of identical drawers. Some level of graduation in sizing not only works better for organization, but also looks better. In this example, there are two sizes.

PLYWOOD BOXES. In spite of the size difference, the joinery details are the same. It pays to take the time to cut all the drawer box fronts, backs, and sides to size first. I like to make stacks of similar parts. This prevents confusion during the joinery stage.

The corner joints on the drawer boxes are tongue and dado. This interlocking connection includes a lot of glue surface and resists the stresses of use.

The particulars are shown in detail 'b.' The outer scoring blades of a dado set usually add up to ¼" for cutting the dadoes. At *Woodsmith*, we recently purchased a ¼" grooving blade that cuts a flat bottom kerf. It's lovely.

Once you're set up, cut a dado on each end of all the drawer sides. (The joinery is identical in front and back.) While you're at it, this is the same setup for cutting the grooves that hold the drawer bottoms, as you can see in detail 'a.' Do this on the sides as well as the fronts and backs.

CUT RABBETS, FORM TONGUES. Set aside the drawer sides for the moment. The front and back receive a rabbet on each end. This forms a tongue that fits into the dado. You can keep the same blade installed. Clamp an auxiliary rip fence so you can bring the blade against it (perhaps slightly recessed) to cut the rabbets. Using some plywood offcuts, make a few test rabbets

INSTALLING DRAWER SLIDES

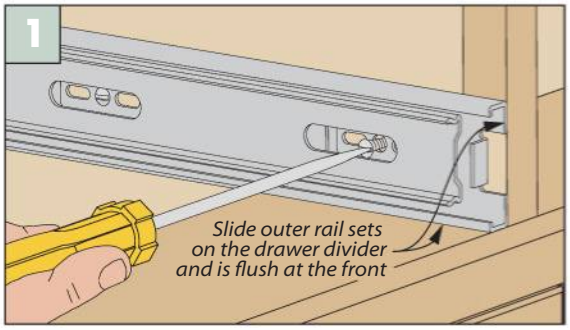

Case Component. Separate the drawer slide into its two parts. The wide portion attaches to the case. Set it flush with the divider and just behind the leg.

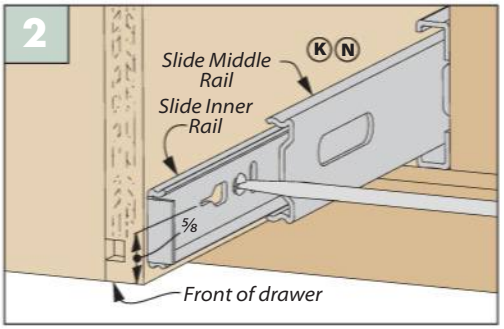

Drawer Component. The smaller drawer component, is positioned slightly back from the front edge of the drawer and raised from the bottom.

in order to dial in the rip fence position (length of the tongue) and blade height (width of the tongue). Then get to work on the fronts and backs.

Assemble one of the drawers without glue to determine the size of the bottom. After cutting them, glue up the drawers.

DRAWER INSTALLATION. Ball-bearing, full-extension drawer slides support the drawers. They come apart so that one piece gets installed on the case and the other on the drawer. The box above highlights the process and has the numbers we used.

FALSE FRONTS. Wrap up the drawers by giving them a pretty face. Hardwood false fronts conceal the slides and gaps. Size them for a consistent reveal on all sides. Take note that the false fronts overlap the center divider, as shown in detail 'b.' Screws hold the false fronts in place, as in detail 'c.' Large bins pulls attach to the front. These are centered on the false fronts.

After your finish of choice, the dresser is ready for loading. How you fold your socks and shirts is up to you. W

Materials, Supplies & Cutting Diagram

A	Legs (4)	1¼ x 1¼ - 28¼
B	Side Panels (2)	¾ ply. - 14¼ - 25¾
C	Side Rails (4)	¼ x 1½ - 13½
D	Bottom/Subtop (2)	¾ ply. - 14½ x 46¼
E	Divider (1)	¾ ply. - 13¾ x 24¾
F	Edging	¾ x ¾ - 165 rgh.
G	Drawer Dividers (4)	¾ ply. - 4 x 22½
H	Bottom Rail (1)	¾ x 1¼ - 45¾
I	Top (1)	1 x 17¾ - 50
J	Back (1)	¼ ply. - 25¾ - 46½
K	Upper Drwr. Sides (4)	½ ply. - 4½ x 14
L	Upper Fronts/Backs (4)	½ ply. - 4½ x 21
M	Drawer Bottoms (6)	¼ ply. - 13½ x 21
N	Lower Sides (8)	½ ply. - 6½ x 14
O	Drawer Fronts/Backs (2)	½ ply. - 6½ x 21
P	Top False Fronts (2)	¾ x 6⅛ - 22 25/32
Q	False Fronts (4)	¾ x 8⅛ - 22 25/32

- (24) 1¼" Pocket Screws
- (16) #8 x 1½" Fh Woodscrews
- (24) #8 x 1" Fh Woodscrews
- (6 pr.) 14" Full-Extension Drawer Slides
- (6) 6" Matte Black Cabinet Pulls

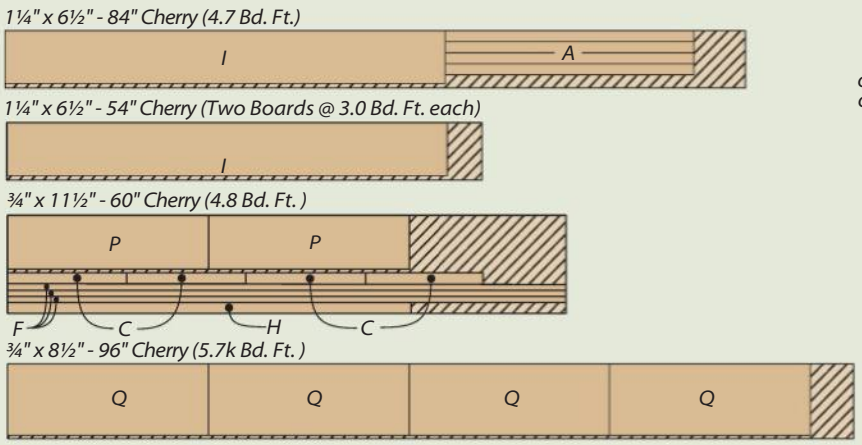

ALSO NEEDED: *One 48" x 96" Sheet of ¾" Cherry plywood, One 48" x 48" Sheet of ½" Baltic Birch plywood, One 48" x 48" Sheet of ¼" Cherry plywood, and One 48" x 48" Sheet of ¼" Baltic Birch plywood*

Written by: Rob Petrie; Project Design: Chris Fitch

▲ A shaped walnut handle makes for a strong and ergonomic grip. A cord looped through it allows you to hang the pan when not in use.

▲ Finger joints on the corners of the frame add eye-catching visual flair and ensure this dust pan will last for years to come.

Illustrations: Bob Zimmerman

Hardwood Dust Pan

Classic joinery combined with gorgeous hardwood make this humble tool not only a functional addition to your shop, but also one well worth hanging on your wall.

Let's be honest: woodworking makes a mess. That spray of sawdust or coiled strip off a handplane may not seem like much at the time but they add up after hours, let alone a whole day in the shop. There are plenty of commercial dust pans available for cheap, whether you go for the flimsy plastic kind, or you spend a few dollars more for one formed from thin sheet metal. But when all this project takes is a few scrap pieces of material and a couple hours in the shop, why not aim for something a little more grand?

COMMON TOOLS & TECHNIQUE. The goal of this pan was to design something that nearly any woodworker could make with little investment in either time or materials — and while still making something a cut above what you'll find at the store. A hardwood frame constitutes the main body, with a handle mortised in for long-lasting stability. The pan bottom is hardboard, which makes for a reliably flat front edge to ensure dust and chips won't just get swept underneath.

The key features here were made using just the table saw and the band saw, along with a few common hand tools. I chose to use my drill press, and edge and spindle sanders as well, but if you're still building out your collection this work can be done with just a hand drill and sandpaper. In the end I think you'll find the product is more than worth the investment.

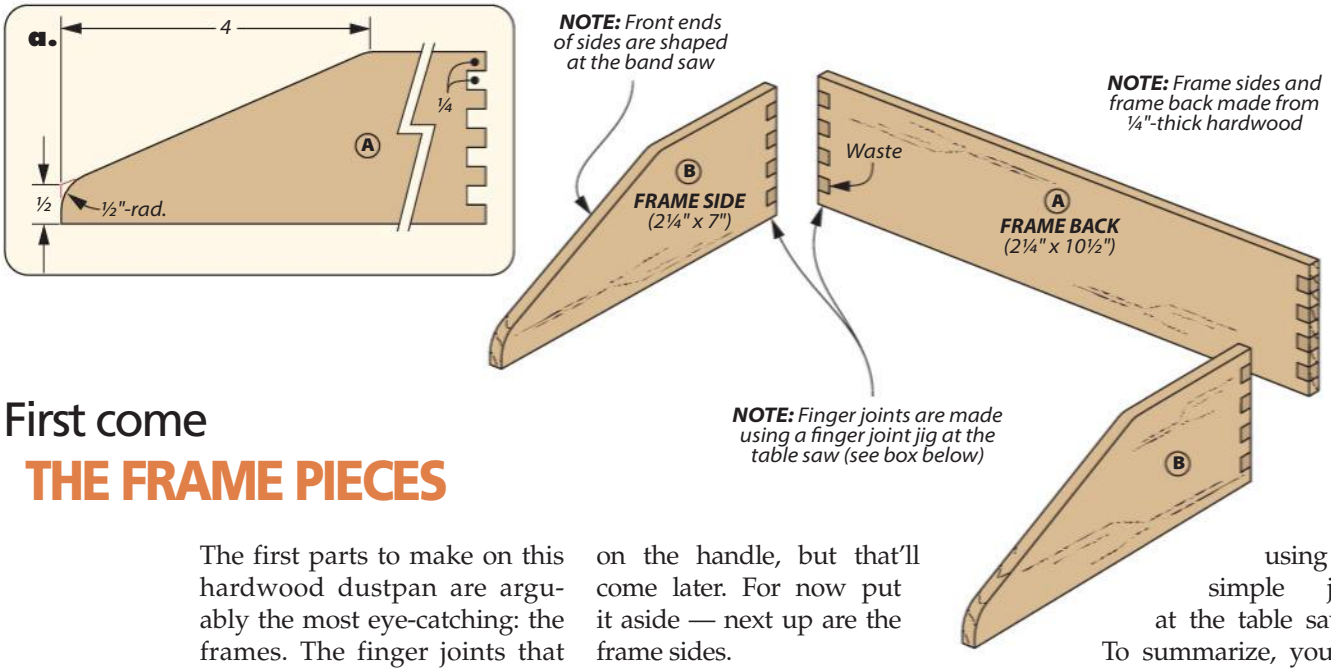

First come THE FRAME PIECES

The first parts to make on this hardwood dustpan are arguably the most eye-catching: the frames. The finger joints that mate these pieces make for a strong frame, while also adding some visual interest to an otherwise mundane tool.

FRAME BACK. The back is the simplest piece, and it makes an excellent cornerstone for the rest of the work. After cutting this piece to size, mark the center of the workpiece. You'll drill a hole here that will accept the tenon on the handle, but that'll come later. For now put it aside — next up are the frame sides.

FRAME SIDES. Size the sides, then lay out the angles and radii on their front ends (detail 'a'). I taped the two pieces together so they could be gang-cut identically as well. I cut them at the band saw, removing the blade marks at the edge sander.

TABLE SAW JOINERY. The box below shows how to cut the finger joints in the back and sides using a simple jig at the table saw. To summarize, you'll use an auxiliary miter fence with a hardwood key to locate each kerf. After you've set up the jig, you simply slot the previously cut notch over the key for each subsequent cut to create the first side of these joints.

FRAME CORNERS

With the back and sides complete, it's time to make their mates.

TABLE-SAWN FINGER JOINTS

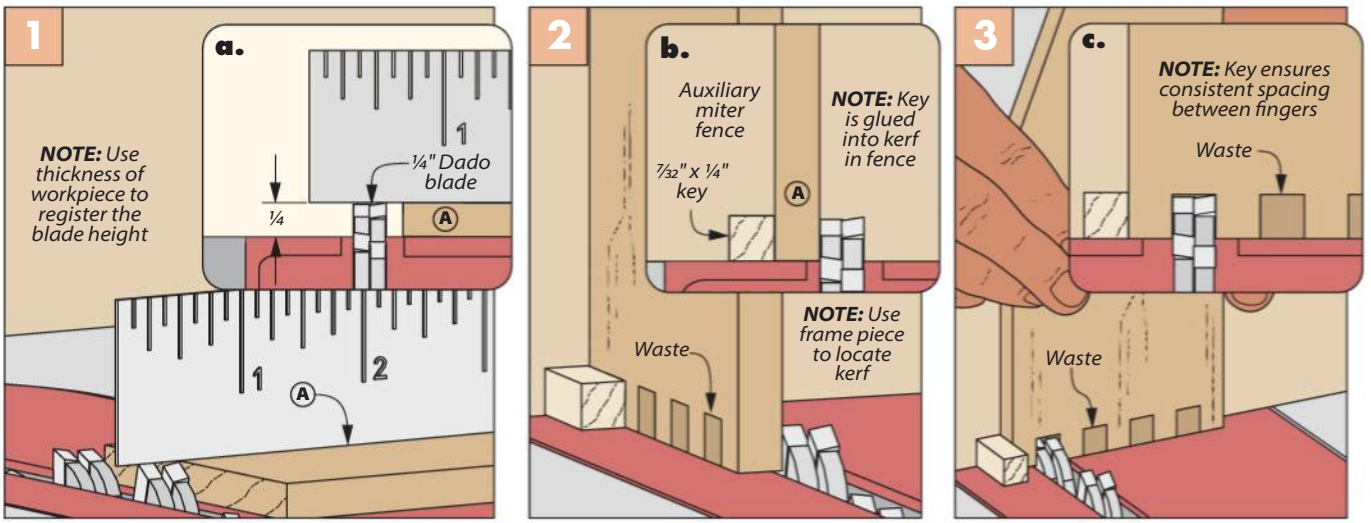

Blade Height. To ensure the fingers would be sized exactly to their mates, I used the frame back to set the blade height.

Key & Kerf. Determine the distance between the key and the kerf, then screw on the fence and cut the kerf.

Fingers. Make the first cut with the piece against the key. Slot the notch over the key for subsequent cuts.

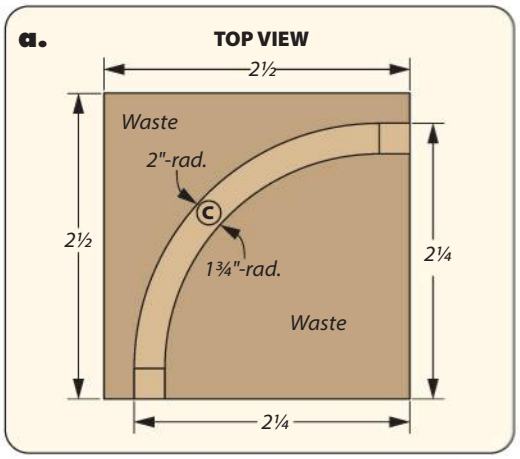

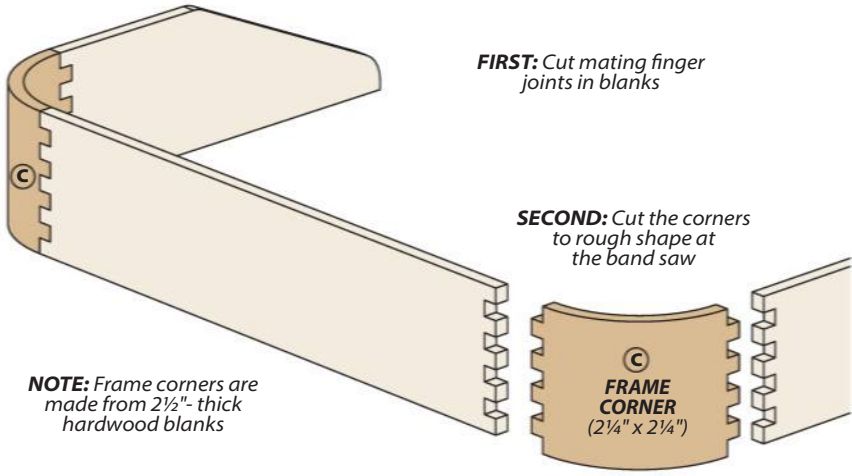

Due to the size of these initial blanks, I chose to cut them from the length of a turning blank.

Once the blanks are ready, lay out the two radii on each piece that will give the corners their curved shape. Before cutting those though, you'll need to cut the finger joints. Starting these out is a little different, as you can see in Figure 1 below. After the initial cut however, the process is the same as before.

With the joints in place, it's time to cut the waste off of these pieces. I did this at the band saw. I started with the exterior, rough cutting it then removing the blade marks at the edge sander. The interior was next (Figure 3). I sanded this to final shape too, this time at the spindle sander. With the frame pieces complete, I could then shift to the handle.

RADIUSED FINGER JOINTS

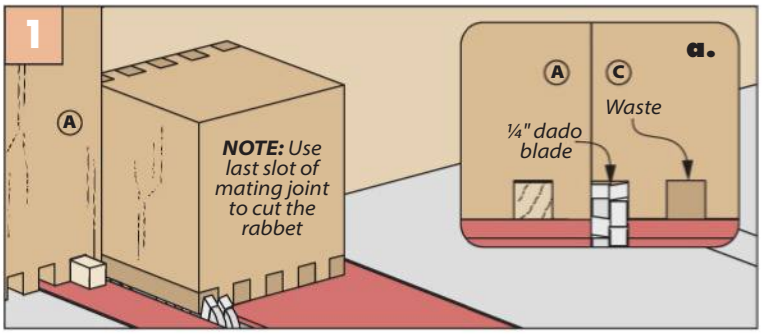

Corner Joinery. To cut the fingers in the corner blanks, slot the last notch in the frame back and press the corner blank firmly against it.

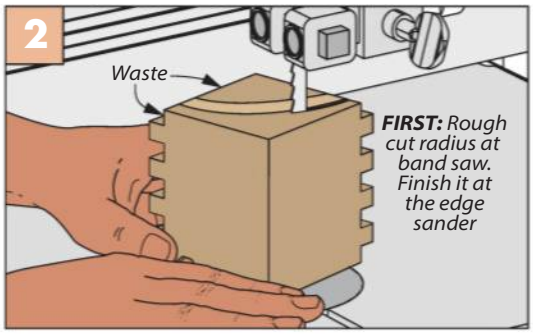

Outer Radius. After cutting the finger joints, rough-cut the outer curve at the band saw.

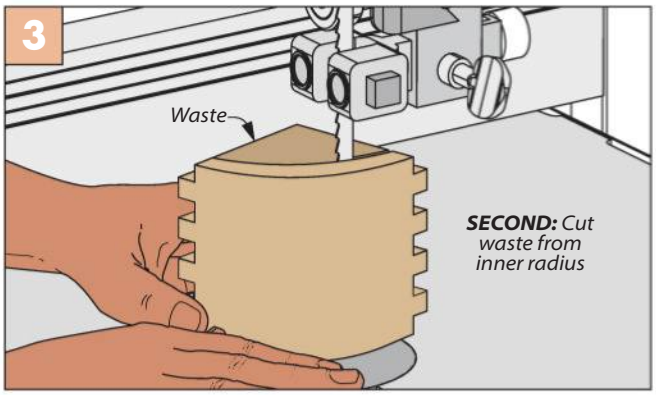

Inner Radius. After sanding the blade marks off the outer radius, cut the inner one at the band saw as well.

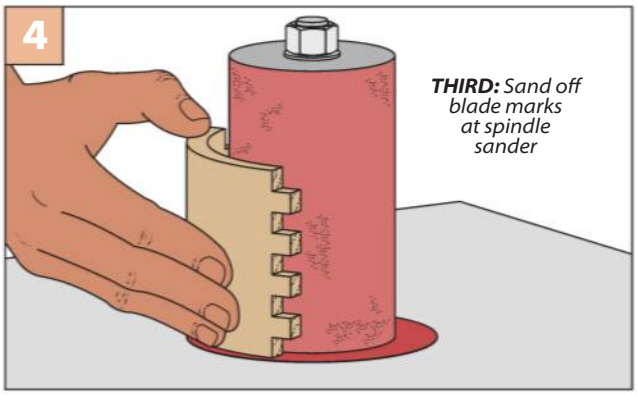

Sanding Down. The spindle sander works well to remove the blade marks on the inner radius.

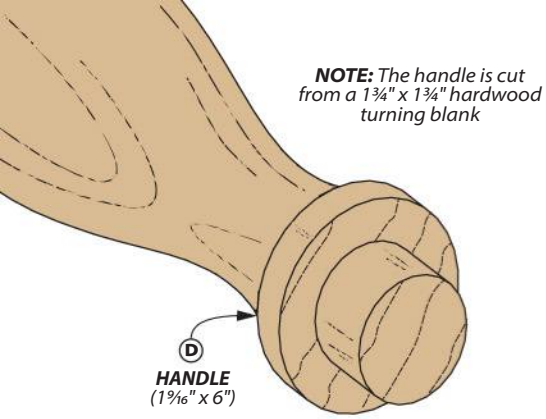

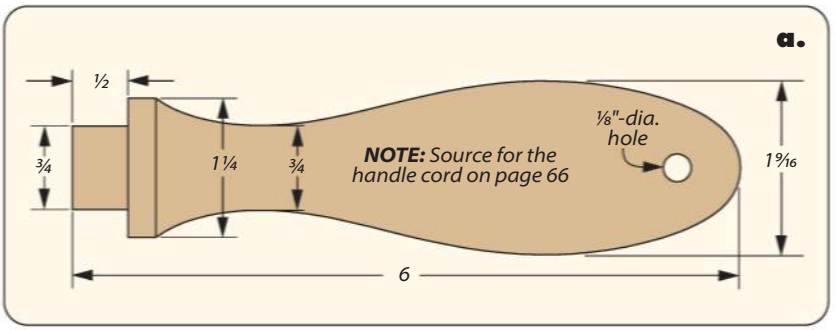

Rounding out a HANDLE

A hardwood handle provides a sturdy, comfortable grip for this dustpan, and there are two ways to go about making it. First, if you have a lathe, you could turn the handle according to the dimensions shown in detail 'a' above. Alternatively, the box below shows how I achieved similar results with a band saw along with a spokeshave, rasp, and file. However, both methods begin with a blank, and I chose to use a walnut blank here.

I first laid out the shape of the handle, along with the hole for the cord. After drilling out that hole at the drill press, it was time to begin shaping.

COMPOUND CURVES. The band saw is an excellent tool for cutting curves — even ones on multiple

BAND SAWN HANDLE

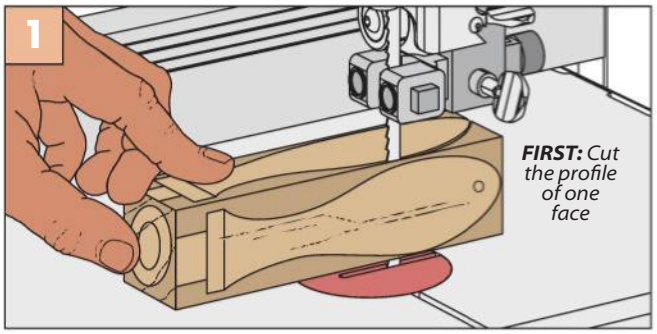

First Profile. Cut the profile of one face at the band saw. Be sure to keep the cutoffs for the second step.

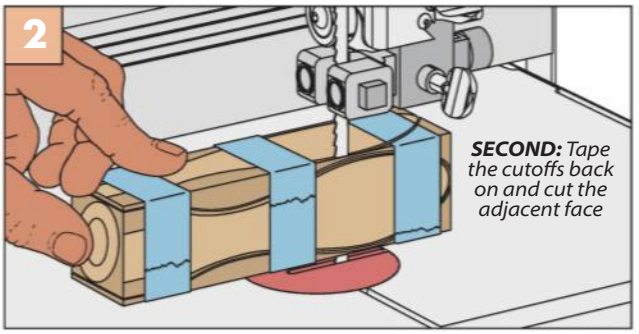

Second Profile. To support the workpiece for the second cut, tape the cutoffs back on to the blank.

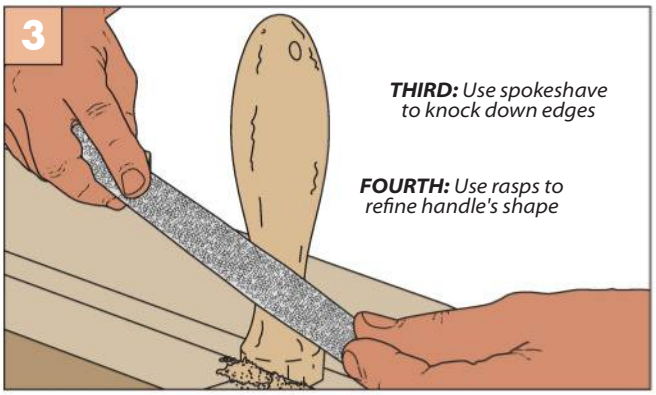

Round & Contour. Clamp the mortise of the handle in your vise, then shape it with a spokeshave and rasps.

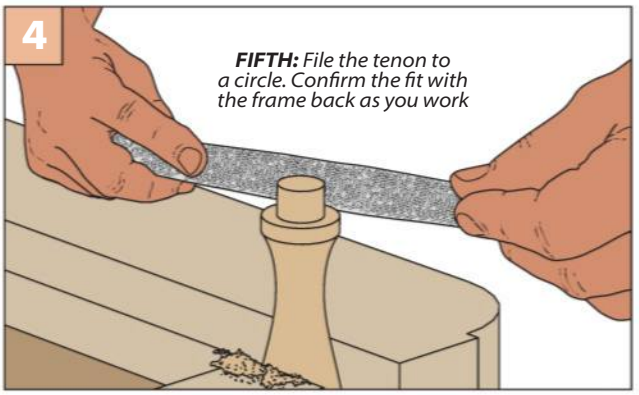

Circular Tenon. Once the body of the handle is finished, flip it over and file the tenon into a circle.

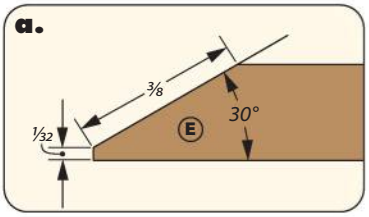

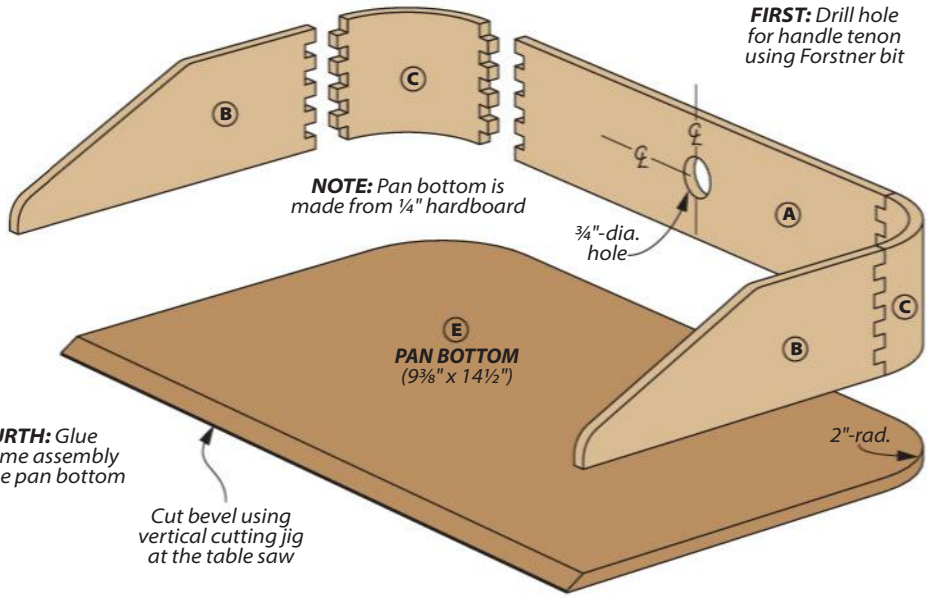

SECOND: Glue up the frame pieces via their finger joints

THIRD: Sand fence pieces flush to each other

FOURTH: Glue the frame assembly onto the pan bottom

faces of a workpiece, with the trick you see in Figures 1 and 2 on the previous page. By taping the cutoffs from the initial cuts back on, you can remove most of the waste on each face, minimizing the work that needs done by hand.

FINISH BY HAND. All that remains on the handle is to round it out. I used a spokeshave to knock down the remaining corners, followed by a rasp to refine the shape (Figure 3). After some sanding, I flipped the handle over to round the tenon on the bottom, as in Figure 4.

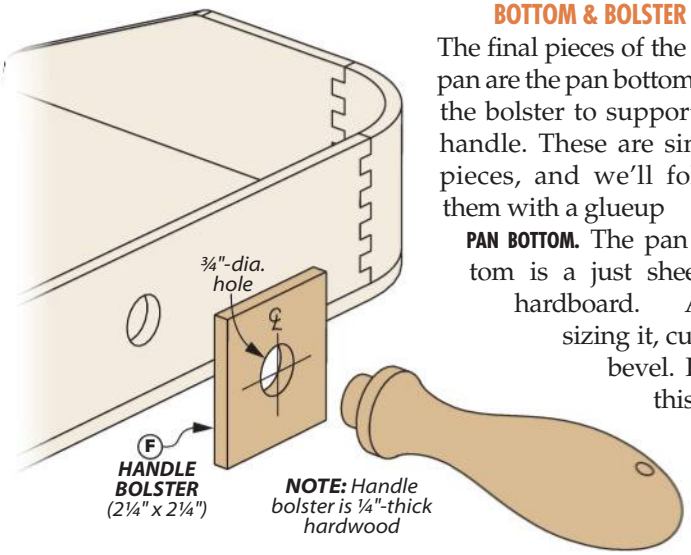

BOTTOM & BOLSTER

The final pieces of the dust pan are the pan bottom and the bolster to support the handle. These are simple pieces, and we'll follow them with a glueup

PAN BOTTOM. The pan bottom is a just sheet of hardboard. After sizing it, cut the bevel. I did this at the table saw, using a vertical cutting jig. Next, I rough-cut the back corners at the band saw.

BOLSTER. There's not much to the bolster. After cutting it to size, use a Forstner bit at the drill press to make the hole that will accept the handle's mortise. While you're here, drill a matching hole in the frame back as well (shown above).

ASSEMBLY. Now glue up the frame at the finger joints. Once dry, sand the assembly, then glue it onto the pan bottom. I used a flush trim bit to finish the back corners of the bottom.

For the handle, I applied glue to the bolster and the handle's mortise, then fit them in place, clamping at the end of the handle. After that clamp comes off, it's just a matter of finishing and tying on the cord loop to complete this dustpan. W

Materials, Supplies & Cutting Diagram

A	Frame Back (1)	1/4 x 2 1/4 - 10 1/2
B	Frame Sides (2)	1/4 x 2 1/4 - 7
C	Frame Corners (2)	2 1/4 x 2 1/4 - 2 1/4
D	Handle (1)	1 9/16 x 1 9/16 - 6
E	Pan Bottom (1)	1/4 hdbd. - 9 3/8 x 14 1/2
F	Handle Bolster (1)	1/4 x 2 1/4 - 2 1/4

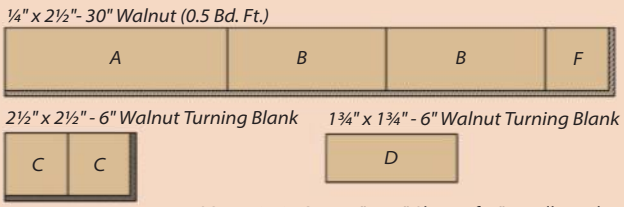

ALSO NEEDED: One 24" x 24" Sheet of 1/4" Hardboard

4 Movement Automaton Pt. 2

The first time around you roleplayed Archimedes when making the gear box. Here you're Geppetto bringing characters to life.

▼ Bear witness to man's best friend's unrelenting pursuit of cookies. He's not interested in the coffee.

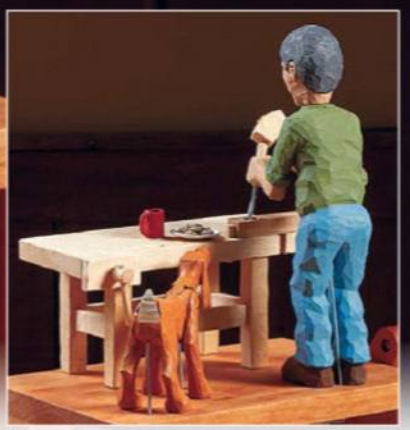

Rover is fully focused on making sure the cookies are safe. He feels that is his duty.

Our woodworker takes a break from chopping to cast a stink-eye on Rover who wants a treat.

Written by: Erich Lage; Project Design: Chris Fitch

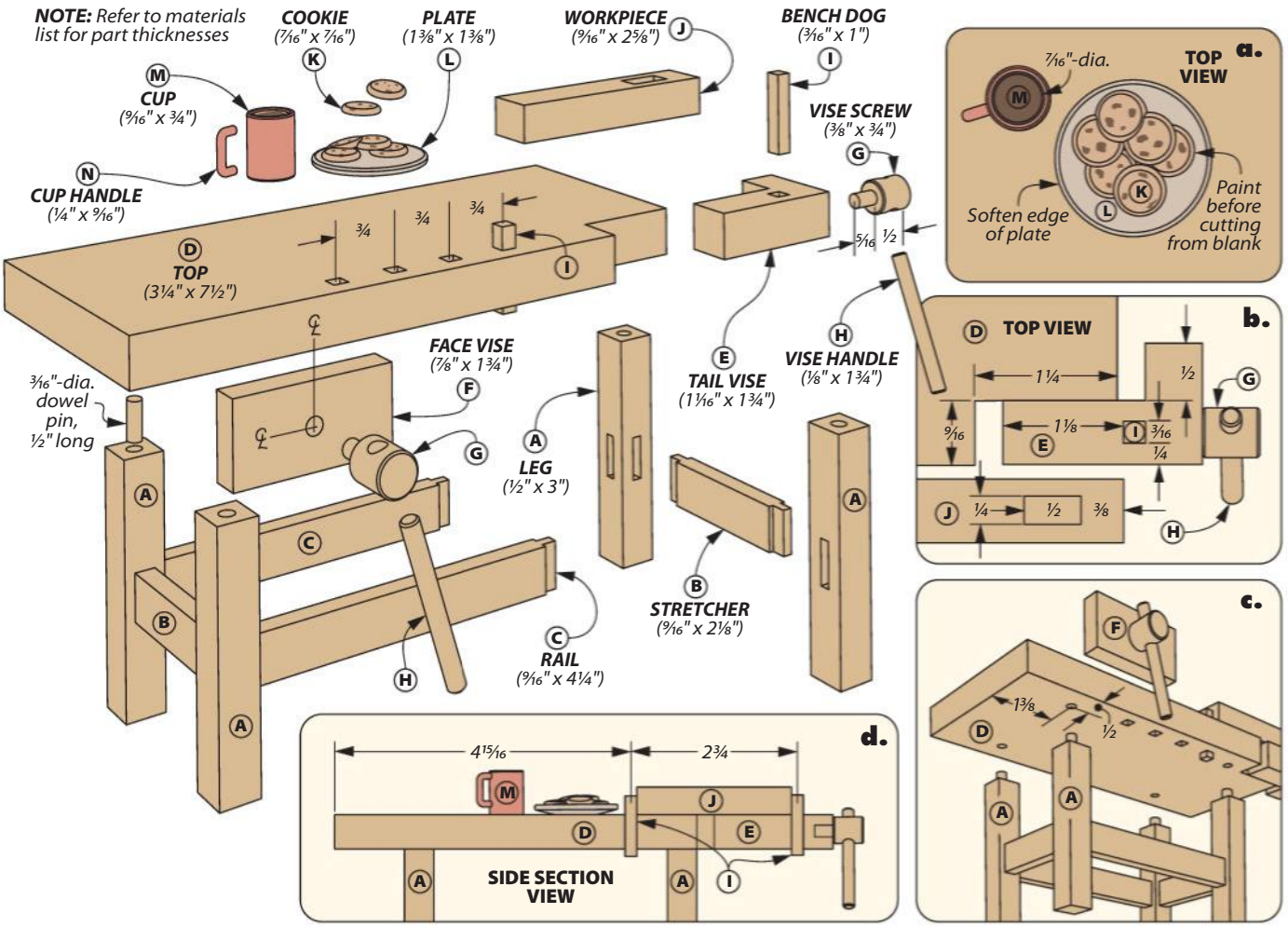

The saying "Form ever follows function" holds true here. Last issue we made the gear box and the gears that will bring our actors to life. This stage is more of a creative journey that starts with making the bench — then the actors that share the stage.

The method of carving used here is formally known as Norwegian Flat Plane Carving (or Scandinavian Flat Plane Carving). Chris used a knife and gouge to shape the props and actors.

PROPS FIRST. If you're new to this type of carving a good place to start is with the bench. After cutting the parts to size you'll first do the joinery work of the necessary mortise and tenons. Then before gluing up the main parts of the bench, sculpt the surface slightly with your knife and gouge.

CARVING CYLINDERS. The vises are next. The blocks that make up the jaws are square; the round parts are a different story. They start out square, then you'll round them by splitting off the sides with your knife — you'll use this technique often while making the more mechanical parts. As for the dog holes in the bench, start by drilling an appropriate sized hole, then square the hole by pressing the square tang of a file into the opening. Be careful here, you don't want to split the bench.

COOKIES & COFFEE. Carving the plate, cookies, and coffee cup are next. The cookies are shaped on the end of a blank that's been shaved to a round shape and long enough to let you carve the surface safely. I chose to paint each cookie before cutting it free from its blank.

THE PLATE. Shaping the plate starts with a block of wood that is a little larger than the diameter of the plate and long enough for you to safely work on. Once again you'll shape the circle of the plate by peeling away strips of the block until you have the plate shape you desire. Then cut the plate to thickness at the band saw. Lastly, relieve a portion of the underside of the plate to lift the plate edge off the surface.

After the plate is painted you arrange the cookies on the plate and glue them in place with some CA glue. The cup is next.

THE CUP. Two parts are required for the cup — a large enough block to contain the cup itself, and a small slab that is used for the profile of the handle. The rough block is only slightly thicker than the height of the cup. It's much larger in width and length so you can safely drill the stopped hole that is the reservoir of the cup at the drill press. Then you can saw the cup free from the blank at the band saw. Next, you'll strip away the outer surface to round the cup. Carve the center of the handle, then carefully trim away the outer profile. Once the handle is glued in place, you can paint the cup and plate. Now it's time to carve the stars of the show.

Illustrator: Becky Kralicek

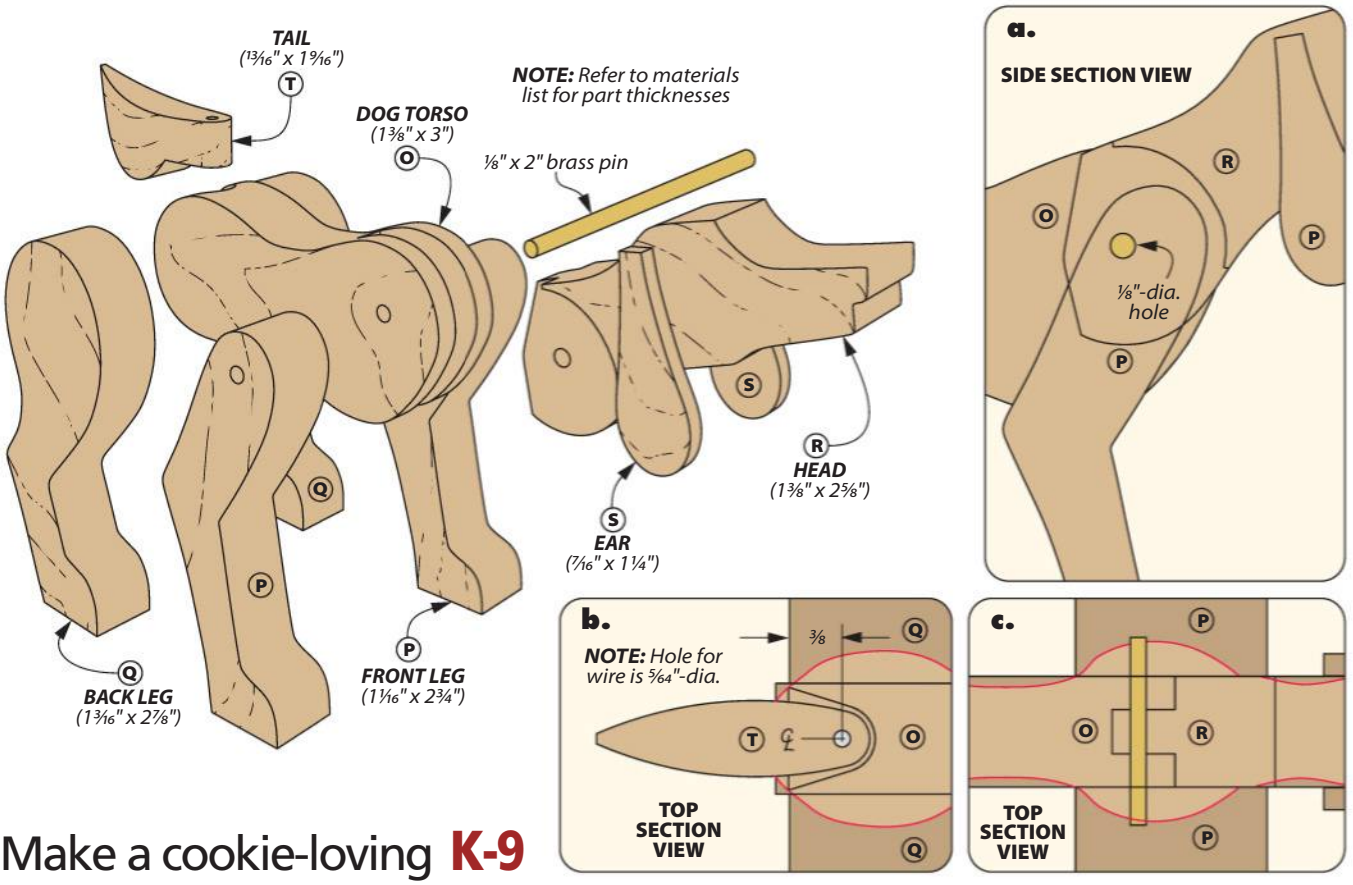

Make a cookie-loving **K-9**

The project has come down to making the two actors that reside on the stage. You have the dog and the man. We'll start with the dog. As you see in the main drawing and details above, the dog is carved and assembled in layers. The layers are made of nine parts. There's the core torso, the head, the ears, the front legs, the back legs, and the tail. The moving parts on the dog are the head that nods and the tail that wags.

These two parts have some form of joinery involved so they can be attached with the fixed body of the dog, yet move freely. For example, the torso has a slot that I'm referring to as an open mortise cut in where the head will fit, but be able to move up and down. Also, there's a pocket on the back of the dog where the tail will rest.

The goal is that once the joinery is cut on each uncarved blank, you're going to sculpt as much of the surface as possible before assembling the parts. Let's start with the torso over at the table saw or you could use the band saw. You need to cut an open mortise in the top where the tenon of the head will join into the body. Also, at this time you need to drill a hole for the pin that attaches the head and torso. This step is shown in the photo at the top of the next page.

Next, you'll shape the pocket on the back of the dog at the drill press with a flat bottom bit (it can be a Forstner bit or a bradpoint bit) then drill the through hole for the wire that wags the tail. Detail 'b' above shows the position of the tail and where to drill the hole.

SCULPTING. Now it's time to start sculpting the torso blank. You want to get as much of the underside and back carved as possible before adding the legs. You'll need to leave some space as you get close to where the legs will attach to the torso so that you can carve the finished fur once the legs are glued on.

FRONT LEGS FIRST. After you've cut out the profile of the front legs start at the paws and carve them to the base of the shoulder. Then you can glue a leg in place on one side of the dog. Before gluing the other leg on you need to chase the hole you drilled in the notch through the leg (see photo at the bottom of the next page). Now you can glue on the other leg — chase the hole for the head pin out the other side. Then it's back to carving

▲ Drill the hole for the pin that holds the head in place and allows it to nod. Place the part on a backer board to prevent chip out.

▲ Take a little time to blend the hip to the torso by carving matching fur. This step makes the part disappear and helps bring the dog to life.

and sculpting the shoulder of the front legs and torso together. The goal is to make the glue line between the two to disappear.

After finishing the front legs, making the back ones is simple. The paws come first then the insides of the legs. From here you can glue them to the torso and complete the shaping of the haunches and torso.

HEAD & TAIL

The head of the dog is next on the agenda (main drawing, previous page). As you did with the torso, the head starts as a square blank. Before you start carving you'll need to cut a rabbet on both sides of the blank. This forms a tenon that fits in the open mortise you made in the torso.

The first order of business is to fit the head blank to the torso. This requires rounding the shoulders of the tenons to match the shoulders of the torso (detail 'a,' previous page). I used a shallow gouge and my knife to chip and carve away the waste. Check the fit as you go along — it won't take much to meet the goal.

The actual carving of the head starts at the shoulder and moves toward the flat spots where you'll glue the ears. Then jump past the ears and carve out the big shape of the snout, which can be followed by refining the eyes and nose.

THE EARS. The ears are carved in the same manner as the cookies. Start with a long blank that's the general profile of the ear. Then carve the top surface followed by undercutting the back. Once the ear is cut free, flatten the back to fit the surface of the head. After you glue it in place, use your carving tools to integrate it into the surface of the head. Repeat the process for the other ear, then it's on to the tail.

THE TAIL. If you take a gander at the drawing of the tail I think you'll agree it looks similar to a rudder. The back of the tail is rounded to fit the opening on the torso. There's also a hole you need to drill though the tail where you'll glue the wire that wags it (detail 'b'). Then you'll spend some time shaping the top and outside of the tail.

SOME ASSEMBLY. At this point you can attach the head to the torso with the brass pin shown in detail 'a.' Widen the hole in the tenon on the head enough so the head moves freely. Cut the pin a little long then file it flush to the surface once it's in place.

▲ After the first leg is glued in place it's time to drill the through hole on that side of the leg. Go slow to prevent chip out.

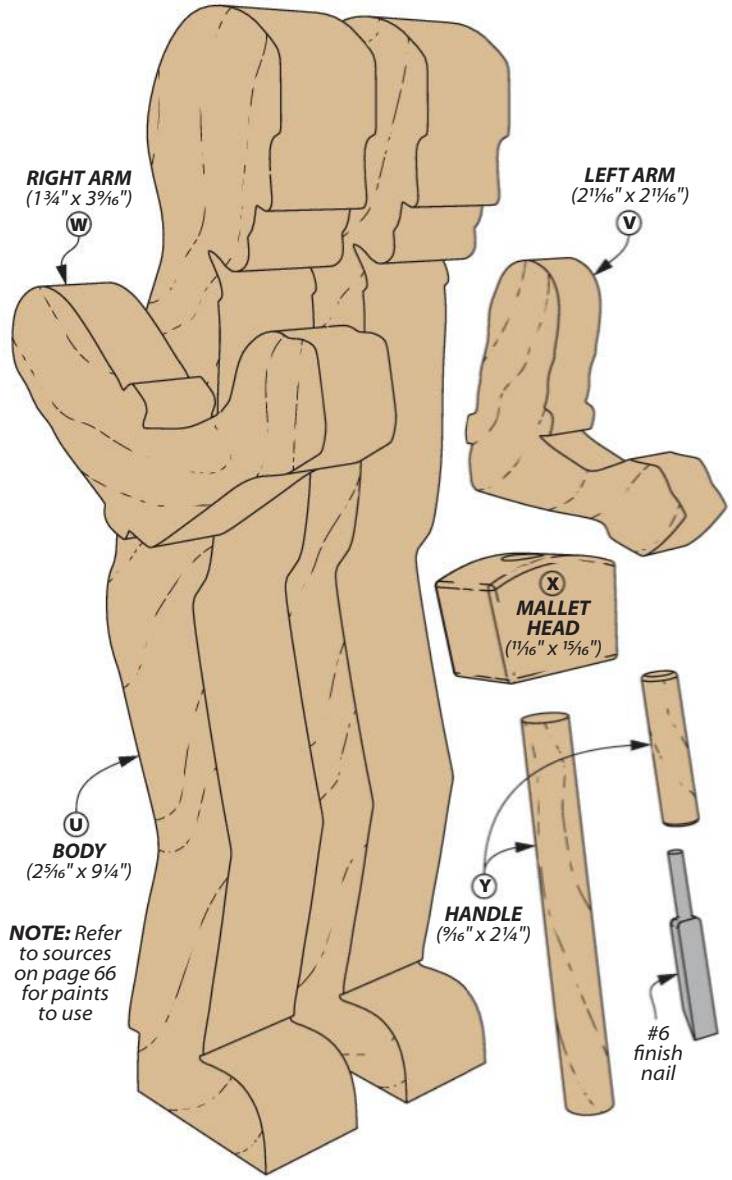

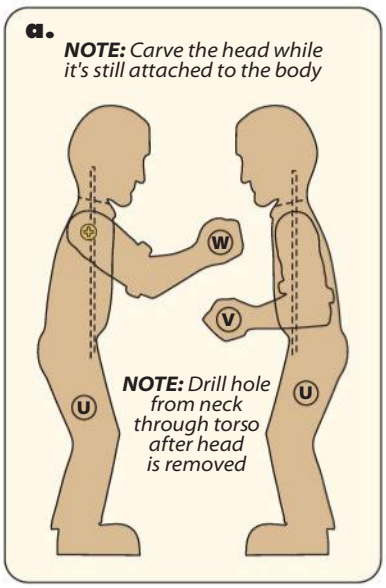

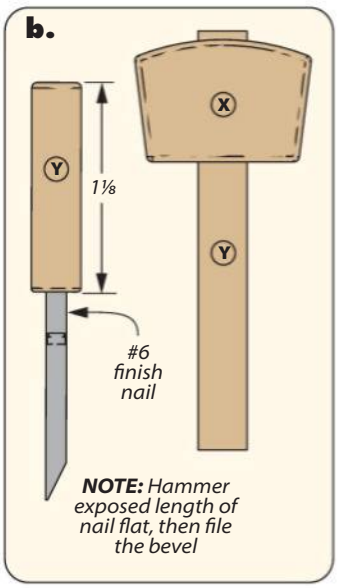

Bring the **MAN** to life

The man consists of four parts: the body, the head, and the two arms. Carving the man is similar to the dog in that you have to plan ahead before the whittling starts. As you see in the drawings and details here, the body of the man comes in two halves with the head still attached. Let me explain the method to this madness.

THE PATH OF LEAST RESISTANCE. To easily and efficiently carve the legs it's best to shape the inseam from the crotch to the shoes before you glue the halves together. This is shown in the photo directly below. When that's done you can carve the head.

As you did with the cookies and dog ears it's easier to carve the head while it's still attached to the body. Block in the big shapes of the brow, nose, and ears first. Then refine the details. Follow up with carving the shirt collar and the shirt portions that will be under the arms. At this time you can paint the head while it's still attached — or after you cut it free from the body just above the collar.

CHISEL & MALLET. Before making the arms we'll tackle the tools the man is using to chop the mortise in the block of wood (detail 'b'). The chisel is fashioned from a #6 finish nail. The handle is shaped in the same manner you used to make the cup. Here you'll

▲ It's much easier and better looking to carve the inside of the man's leg in halves, then glue them together.

◀ Time and patience are the two tools that will work to your advantage when choreographing the arm chopping the workpiece.

drill the hole to fit the unflattened portion of the finish nail.

As for making the mallet, I'm going to assume at this stage you get the gist of how to make these small parts. Next you'll make the arms that puts these tools to use.

THE ARMS. The arms are a similar challenge as the dog legs. Here, start by carving the rolled up sleeves and going both directions. After fitting the hands to the chisel and mallet it's time to position the actors.

SETTING THE SCENE. There's a pattern online at *Woodsmith.com/279* that shows you how to place the bench and actors on the stage. Attach the wire to the dog's head and tail and do some test turns.

Now dry fit the bench and man with the goal of lining up the hand with the chisel in the mortise of the workpiece. When you feel confident about their locations, glue the bench in place with quick-set CA glue. The last challenge is the toughest — you need to synchronize the mallet striking the chisel and the man turning his head to say "no" to the dog. I did this with the head slid in place on the wire. After the two actions were running smoothly, I epoxied the head, tightened the screw in the arm, then finished any touchup carving that was required.

After the actors are secured in place, fish the guide wires through and give the automaton handle a maiden turn. If all is moving correctly, add any touch up paint before taking your show on the road. W

▲ The head is the last piece to install. It needs to work in sync with the chopping arm.

▲ A simple L-shaped bend or slight hook is all that's necessary to connect the wires to the gears below each of the characters.

GO 2 Online Extras

To find full-sized patterns for the man and his dog, go to:
Woodsmith.com/279

Materials, Supplies & Cutting Diagram

WORKBENCH		
A	Legs (4)	1/2 x 1/2 - 3
B	Stretchers (2)	1/4 x 9/16 - 2 1/8
C	Rails (2)	1/4 x 9/16 - 4 1/4
D	Top (1)	9/16 x 3 1/4 - 7 1/2
E	Tail Vise (1)	9/16 x 1 1/16 - 1 3/4
F	Face Vise (1)	5/16 x 7/8 - 1 3/4
G	Vise Screws (2)	3/8 x 3/8 - 3/4
H	Vise Handles (2)	1/8 x 1/8 - 1 3/4
I	Bench Dogs (2)	3/16 x 3/16 - 1
J	Workpiece (1)	7/16 x 9/16 - 2 5/8
K	Cookies (6)	1/16 x 7/16 - 7/16
L	Plate (1)	3/16 x 1 3/8 - 1 3/8
M	Cup (1)	9/16 x 9/16 - 3/4
N	Handle (1)	3/32 x 1/4 - 9/16
DOG		
O	Dog Torso (1)	5/8 x 1 3/8 - 3
P	Front Legs (2)	1/2 x 1 1/16 - 2 3/4
Q	Back Legs (2)	1/2 x 1 3/16 - 2 7/8
R	Head (1)	5/8 x 1 3/8 - 2 5/8
S	Ears (2)	1/8 x 7/16 - 1 1/4
T	Tail (1)	7/16 x 13/16 - 1 9/16
MAN		
U	Man's Body (2)	1 x 2 5/16 - 9 1/4
V	Left Arm (1)	5/8 x 2 11/16 - 2 11/16
W	Right Arm (1)	5/8 x 1 3/4 - 3 9/16
X	Mallet Head (1)	9/16 x 11/16 - 15/16
Y	Mallet/Chisel Handle (2)	9/16"-dia. x 2 1/4

- (1) #6 Finish Nail
- (1) #4 x 3/4" Rh Woodscrew
- (1) 1/8"-dia. x 2" Brass Pin
- (1) 12" x 14 Ga. Steel Guide Wire
- (4) 3/16" x 4" Dia. Dowel

Written by: Phil Huber; Project Design: Chris Fitch

Roycroft Side Table

Take a detour from the usual Arts and Crafts project. Here's an easy-to-build table with a joinery lesson built in.

Tusk tenons extend through mortises in the legs. The tenons are secured by tapered wedges. There's no glue so the table can be disassembled easily.

The shelves have a back stop to prevent items from falling off the back. It's a small detail that makes a big difference.

The allure of Arts and Crafts furniture is how it puts both function and joinery on display. This table is clearly suited for everyday use — no fancy tea parties here. The shelves are spaced for a small collection of books and special treasures. The top offers a just-right space for looking at a book or holding a sandwich and drink.

In the shop, the table provides a case study in mortise and tenon joinery. All of it centers on the two end assemblies. Standard joints connect the legs to the apron and feet. The shelves show off a bit. Here long tenons extend from through mortises in the legs. In a joint like this, glue wouldn't do much to secure the connection. Instead, wedges slide into another set of through mortises in the shelf tenons. It's a knock-down joinery technique that adds a visual flair.

Chris, the project's designer, took inspiration from the work of the Roycroft community. Elbert Hubbard formed this unique collection of craft workers and artists near Buffalo, New York in the late 1800s. Their distinct flavor of Arts and Crafts furniture plays with angles and curves more than the square, heavy aesthetic of other makers. Chris' table is made from cherry for warm tones without heavy grain. The building process is its own reward for some time spent in the shop.

Illustrations: Dirk Ver Steeg

Eye-catching
END ASSEMBLIES

The construction process on the table takes a bottom-up approach. The end assemblies carry the load weight-wise as well as aesthetically. Two legs on each end slip into a foot on the bottom and an apron at the top. It's these two last pieces that we'll start with.

MORTISES, THEN SHAPING. You're sure to notice the curves on the feet and on the apron, but those come later. Square blanks suit the joinery steps. Details 'a' and 'b' along with the front view at the bottom of the page indicate the size and location for the mortises you need to create.

The mortises are centered on the thickness of the parts. What's important here is that the distance between each mortise is consistent with each apron/foot pair. This way the legs will stand parallel in the assembly. I suggest laying out the mortises on the feet. Then center the matching apron next to it and transfer the layout lines to the apron.

How you form the mortises is a matter of preference and

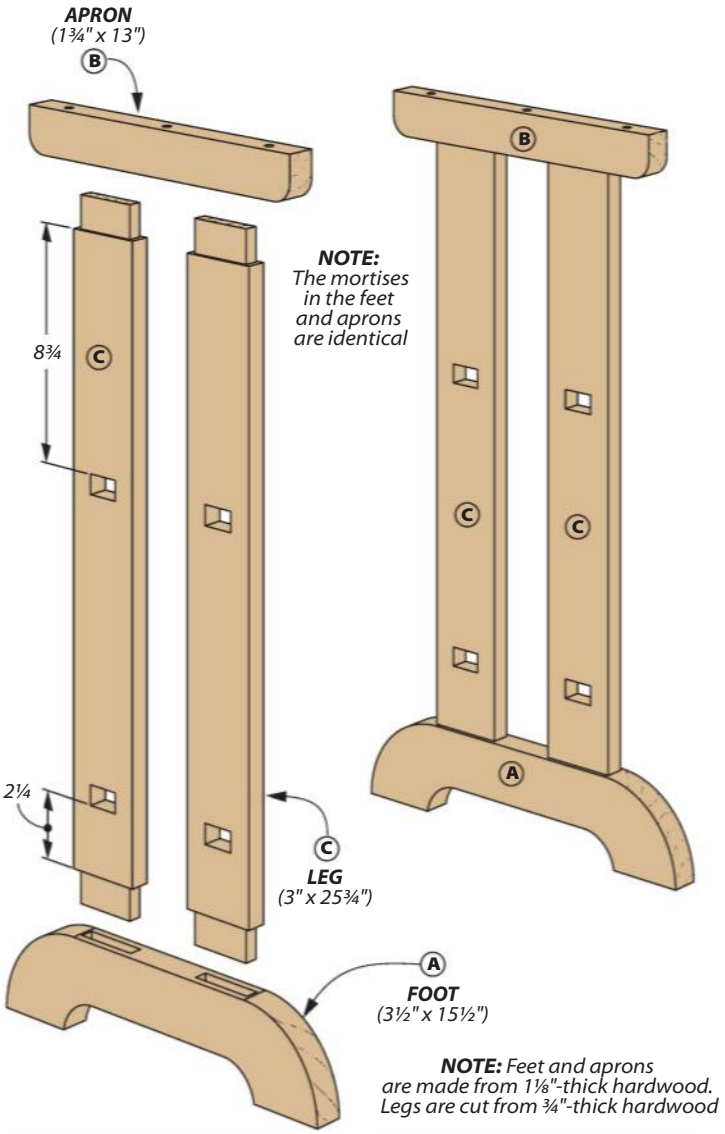

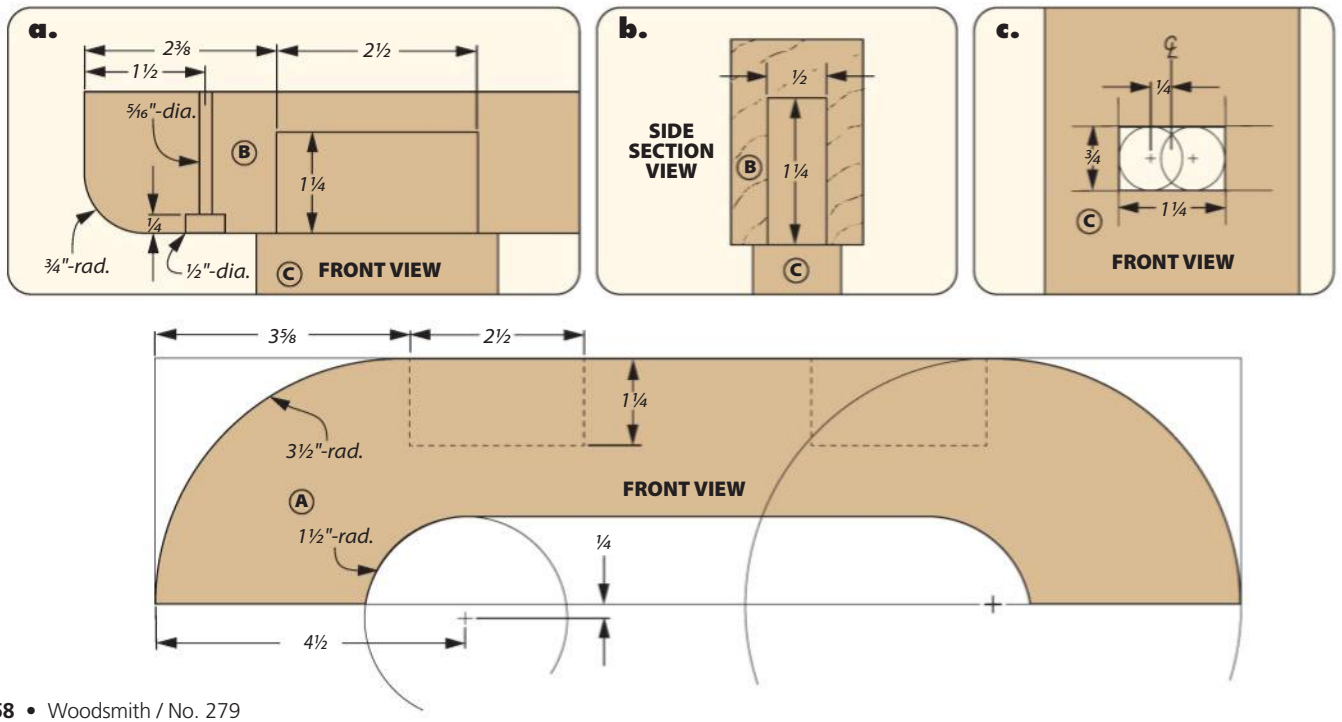

tooling options available to you. One of our favorites is to drill out the mortise at the drill press. Making several passes along the length of the mortise results in smooth sides. That leaves only the ends for chisel work.

Don't overlook the holes in the aprons. As you can see in detail 'a,' these counterbored holes are used to attach the top.

NOW SOME CURVES. With the joinery work complete, it's time for shaping. The feet have a cutout along the bottom edge that provides visual lift and more stability. On these profiles, I prefer to drill out the end-radii with a Forstner bit. Then form the straight section at the band saw.

Stay at the band saw to shape the radius on the outside of the feet and aprons. A file and sandpaper (or the disc sander) removes the blade marks.

CONNECTING LEGS

Two legs join each apron/foot pair. Overall, the form keeps with an Arts and Crafts simplicity. Joinery holds your attention here. The box below shows the main steps. So I'll pick out some of the critical points as we go.

TENONS. The mortises in the aprons and feet are the same depth. This means that all the tenons you need to make are identical. This is shown in the main drawing and details 'a' and 'b' on the previous page.

Figures 1 and 2 below highlight a way to form the tenons on the table saw. A wide dado blade does the cutting. The workpiece is guided by the miter gauge fitted with an auxiliary fence. Notice that the rip fence serves as the end stop. Since this setup is for tenons and not through cuts, the operation is safe.

MORE MORTISES. In addition to the end tenons, each leg holds a pair of through mortises. These accept long tenons cut on the shelves that are coming.

Just as with the mortises in the aprons and feet, these mortises need to align across all the legs. This way the shelves will sit level. Taking care with the side-to-side marking of the mortises simplifies the tenon cutting on the shelves later on. Mark both faces of the leg.

Figures 3 and 4 show a reliable approach. Drill out the waste with a Forstner bit in a drill press. The holes overlap slightly. From there some handwork is necessary to eliminate the central nibs and to square up the corners. This chisel work is best done with thin cuts and keeping a keen eye on your layout lines, working from both sides.

TENONS & MORTISES ON THE LEGS

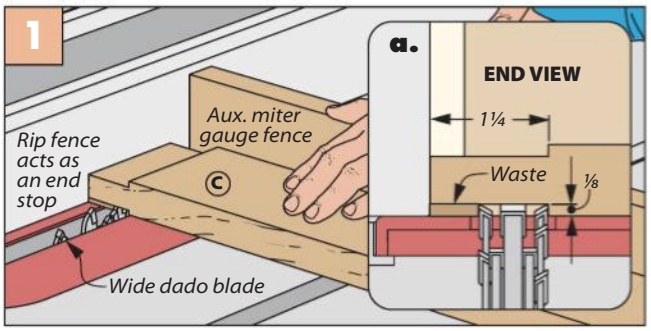

The Cheeks. Make several passes across a wide dado blade to form the tenon cheeks.

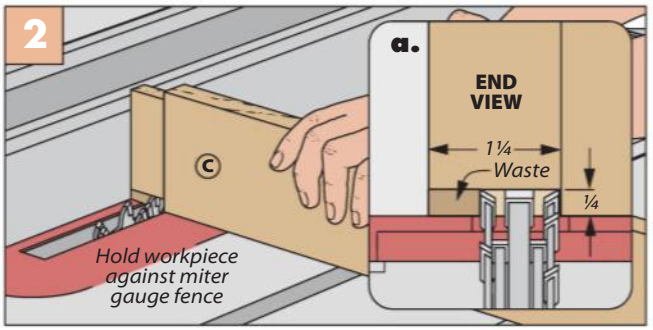

On Edge. Adjust the height of the blade and turn the workpiece on edge to create the end shoulders.

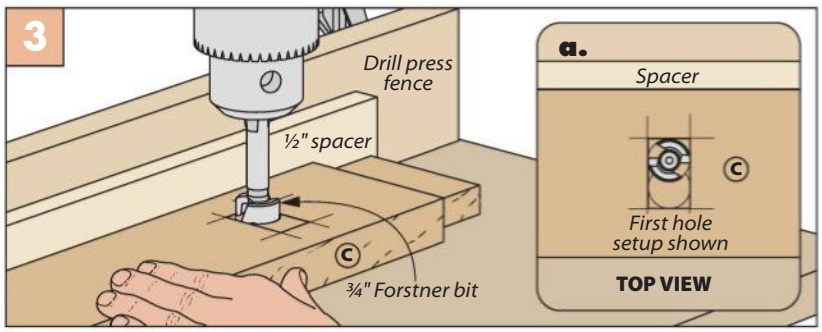

Mortises for the Legs. Make a spacer to locate the two holes that make up the mortise. Remove the spacer to drill out the opposite side.

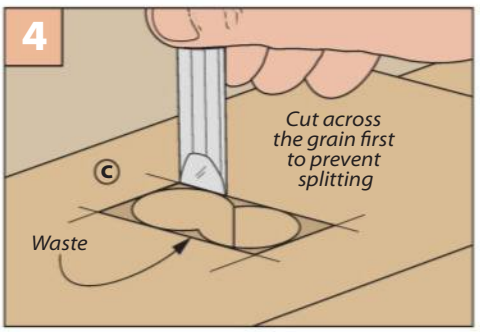

Square It Up. Use a chisel to trim the remaining waste back to the layout lines.

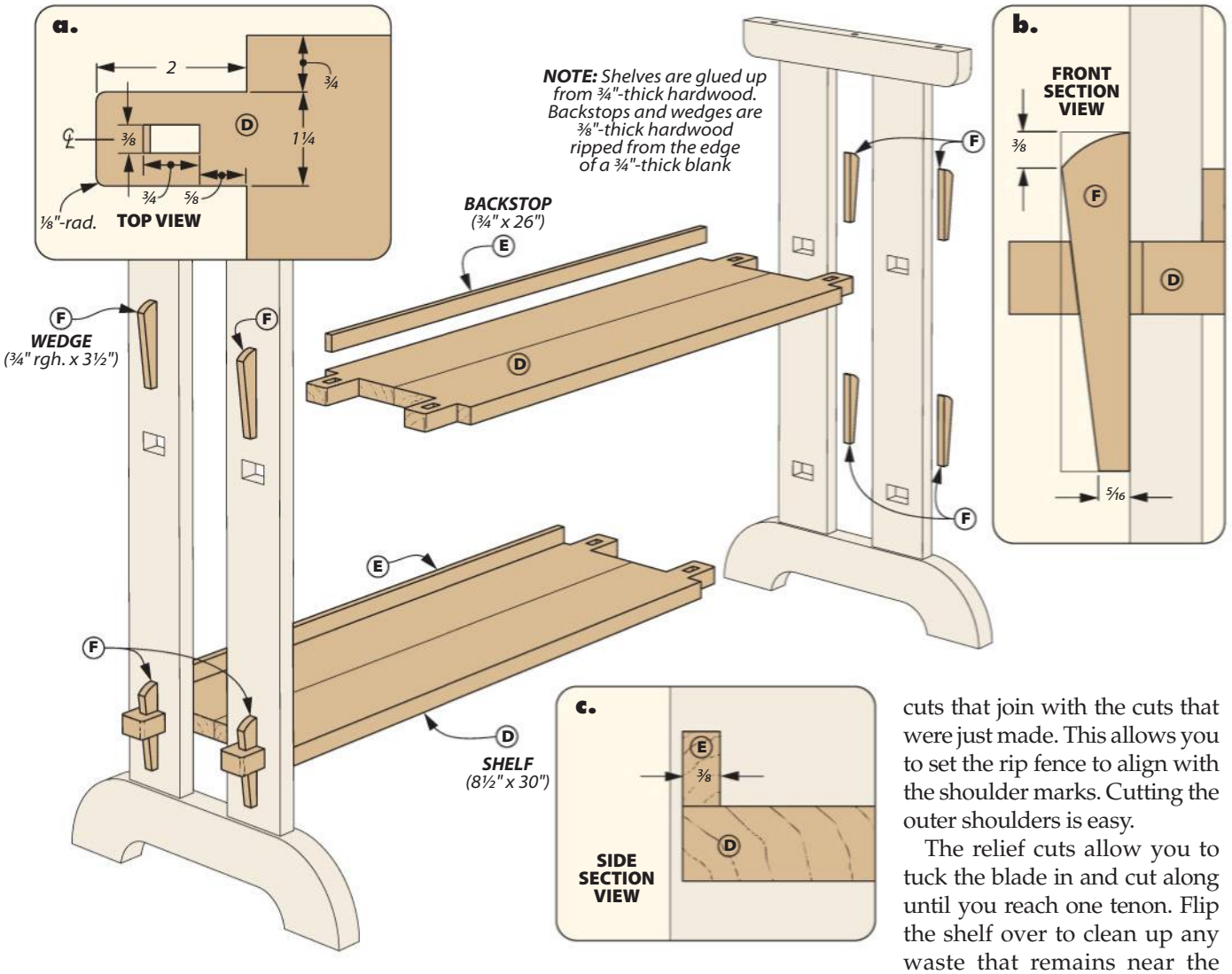

A pair of SHELVES

The next stage of the construction process turns our attention to the horizontal components: the shelves and top. These parts involve gluing up panels.

KNOCK-DOWN JOINERY. The connection is called a tusk tenon — like the prehistoric ancestor of a more domesticated through tenon. In the drawing above and detail 'b,' you can see that the tenons on each end of the shelf extends well beyond the outer surface of the legs.

Not only that, but another mortise pierces the tenon. Here's where the tusk part comes in. A wedge driven through that mortise presses against the leg like a clamp. With that overview, let's get into the how-to.

XL TENONS. Consistency serves as the goal with the two shelves. They need to be cut to the same length and width. Mark and fit each shelf to a specific location and direction.

I scribed a shoulder line for the tenon around each end and all sides. Center an end assembly on the end of the shelf and transfer the locations of the mortises to the shelf.

I cut out most of the waste at the band saw. Set the rip fence to make straight sides for each of the tenons.

For the space between the tenons, I made sweeping relief cuts that join with the cuts that were just made. This allows you to set the rip fence to align with the shoulder marks. Cutting the outer shoulders is easy.

The relief cuts allow you to tuck the blade in and cut along until you reach one tenon. Flip the shelf over to clean up any waste that remains near the opposite tenon.

Clean up the cut edges with files and sandpaper. Check the fit of the tenons into their respective mortises. This doesn't need to be a tight fit. The tenons should slip in easily. Avoid large gaps as best you can.

MORE MORTISES. The through mortises are nearly the same as the ones in the legs (detail 'a'). However detail 'b' points to an important aspect. The mortise needs to extend inside the leg. This way the wedge bears against the leg and not the inner wall of the mortise.

The drawings in the box on the next page highlight the steps. Note that the outer wall of the mortise is sloped slightly, as in Figure 2.

The wedges are cut to fit into the mortises with ends in place. I like to make these extra long. Then I can fine-tune the fit before cutting them to final length.

Don't overlook the backstop that gets glued to the back edge of each shelf, as shown in detail 'c.' It runs shoulder to shoulder to resist racking.

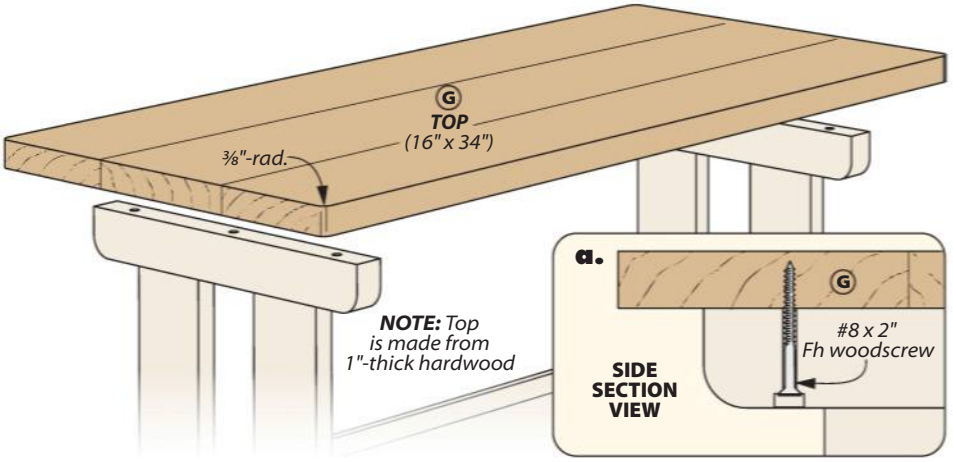

THE TOP

By the time you get to this point, the joinery lesson is over. For a coast to the finish, this top is just what you need.

Level the joints and smooth the surfaces. After cutting the top to final size, the corners get a radius to eliminate sharp points. Detail 'a' shows how the top is connected with screws. I used a brad point bit to mark the locations so that I could drill pilot holes and avoid disappointment here at the end.

Instead what you'll find is a delight. This compact table creates a pleasant refuge for a cup of coffee and a certain magazine to plan your next project. W

ANGLED MORTISES

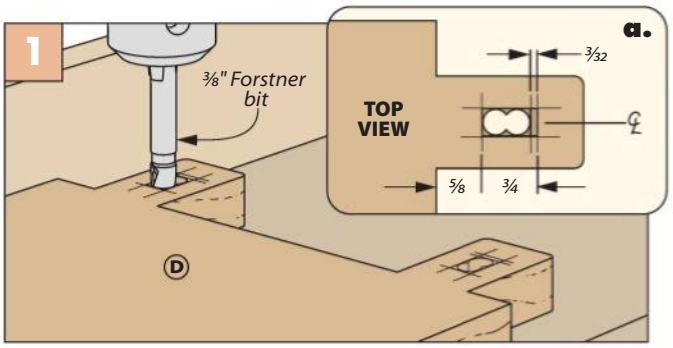

Drill It Out. Drill overlapping holes to define the overall shape of the mortise. A Forstner bit works best here for making overlapping holes without wandering.

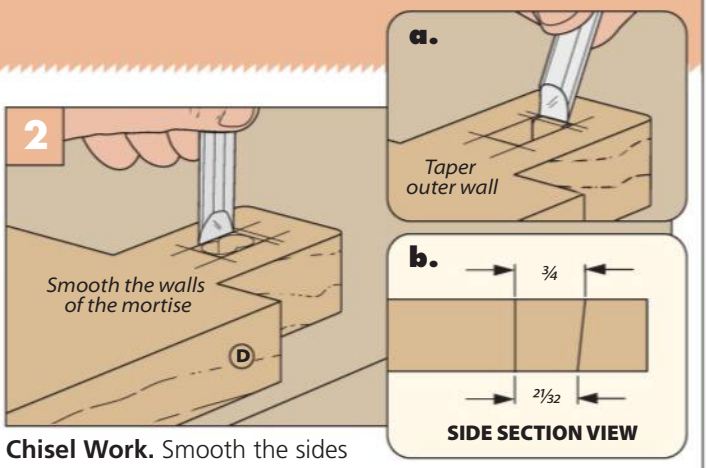

Chisel Work. Smooth the sides and square the inner wall with a chisel. Tilt the chisel and pare a slight taper on the outer

Materials, Supplies & Cutting Diagram

A	Feet (2)	1 1/8 x 3 1/2 - 15 1/2	**E**	Backstops (2)	3/8 - 3/4 x 26	•	(6) #8 x 2" Fh Woodscrews
B	Aprons (2)	1 1/8 x 1 3/4 - 13	**F**	Wedges (8)	3/8 x 3/4 - 3 1/2		
C	Legs (4)	3/4 x 3 - 25 3/4	**G**	Top (1)	1 x 16 - 34		
D	Shelves (2)	3/4 x 8 1/2 - 30					

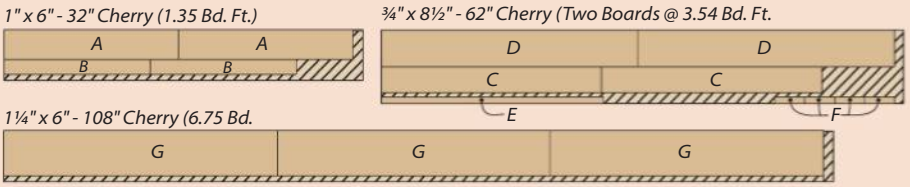

A Lesson in Box Making

Boxes are a paradox. Like a lot of woodworkers, I build boxes as a diversion between larger pieces of furniture. However, I know quite a few who say that boxes are the thing they enjoy most about the craft.

Boxes require a small amount of material to make. As a result, it's possible to build one at a low cost. On the other hand, the compact nature of a box forces you to focus on small details. When people hold a box, they see all the features and flaws. So don't let these tiny treasures fool you.

I find that the same skills and principles that making a great box teaches can be applied to other woodworking projects. On these pages, I gathered a number of my boxes. Not a one is perfect, but in considering these, I'll share some of the lessons they taught me about boxes and other projects.

FIRST BOX. The box on the lower left of the next page is the first one I made. It was longer ago than I care to share here. It's focus is a door that came from a post office that was getting remodelled. My dad brought a few home and I wanted to make something around it.

The box carries all the wonders and flaws of a new woodworker. It's assembled with woodscrews covered by plugs. Some of the joints aren't closed. I figured that the stain would cover up the blade marks and lack of sanding.

Written by: Phil Huber

I used to think that I should remove the door and start over. Now I think I'll keep it. It's become precious to me.

SCALE. The box parts are ¾"-thick hard maple. I'm certain they were in dad's scrap bin. Wood comes in common sizes. It's easy, (especially for new woodworkers), to stick with stock dimensions.

The issue is that as the project becomes smaller, the relative scale of parts becomes more pronounced. Those thick pieces in my first box look clunky.

The lesson I learned: the smaller the box, the thinner the parts should be. A corollary to that lesson is to vary the thickness (or apparent thickness) of the parts that make up the box.

The box has a classical look to it that works, like a Greek column. Thin sides along with a smaller and slightly thinner top would emphasize that look even more. Keep the stately effect while adding a bit of lightness.

▲ The walnut burl veneer is the hero. However the exposed spline joinery and thin bands of color contribute to the appeal of this box.

RULE OF THREE. It's tempting on projects of all sorts to show off: wood species, joinery technique, hardware, all the things. On boxes it feels overwhelming.

Years ago, a friend's dad, who is an architect told me about the "rule of three" he used in his practice. I think it applies just as much to woodworking. The guideline: if you have more than three eye-catching details, you don't have any.

This doesn't mean you have to have three on every project. Instead, find at most three elements you want to play up and make those count. More is sometimes just more.

IN USE. The box above provides an example of how this can play out. The prime detail is the walnut burl veneer on the lid. The crisp square lines of the box allow this dramatic grain to take the stage.

The second detail is the joinery. Splines reinforce the miter joints on the box. Even though the splines are made from the same material, the exposed end grain allows them to stand out.

The final element is the glints of blue that edge the lid and the bottom panel. You'll notice that while there are three main elements, they don't carry the same weight. I believe this gives a project a sense of order. Someone holding the box may not be able to point this out, but the sense of rightness is there.

◀ We all start somewhere. This is my first box. I love it in spite of its flaws. The lessons I learned from this box play out in every other box I make.

▲ Use obvious (or subtle) clues to define the parts of a box. Or leave them out in order to enhance a sense of mystery.

DEFINITION

Boxes invite people to pick them up, examine the details, and find out what's inside. As builders, we can reward the curiosity by the sense of structure a box displays. I like to think of each box as having three primary components: a lid, body, and base.

If you create a distinct lid, you've given a person the invitation to open up the box. Blur that boundary and an unsuspecting user could be surprised by picking up the box in a way that spills the contents. That's not the kind of attention you want.

The two boxes on the left of the photo above show different ways of creating definition. The jewelry box at the top has a formal air. Moldings define the lid and raised feet are obviously the base. Inlay banding and corner bands define the body.

The lower box takes a subtle approach. The shadow line created by the recessed bottom acts as the "base." The lid is indicated by a band of blue and a notch at the front. The quiet grain of the body is all the clue you need.

There may be a good reason to break that rule. In the puzzle box on the upper right, the idea is to confound the viewer and draw them into the mystery of how the box opens.

LIMIT HARDWARE. I've already mentioned how boxes require smaller scale parts. This principle applies to hardware — and that's the problem. The second box I made was a music box. In the lower left photo, you can

▲ The lid design of this box made installing the hinges a pain. After this box, I avoid hardware as often as I can.

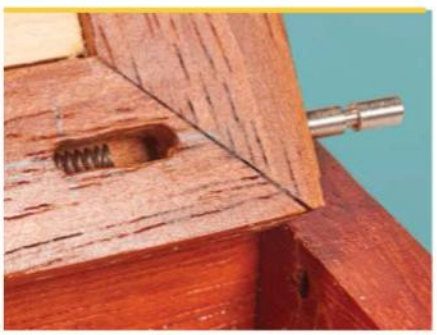

▲ Spring-loaded hidden pin hinges offer the benefits of traditional hinges while making the installation easier.

▲ The lid on this box flips up to rest in a notch formed along the back of the sides. It functions just like a hinge.

see the result. The lid can't open fully with this design. So I struggled to get the hinges installed.

It's debatable whether it's the fault of the design, the hardware, or the maker. The lesson I learned is I prefer to skip hinges if at all possible. Sliding lids and lift lids work best at this scale. If you need a pivoting lid, consider pins or recessed pin hinges, as in the lower middle photo.

PURPOSE. Designing a fresh take on a box feels daunting. To jumpstart your creativity, give the box a specific purpose or use. The size or nature of its contents drives the shape of the box and can lead to other ideas.

I picked up a set of rasp rifflers. In order to keep them safe and organized, I made the sliding lid box shown at right. This box fits in my tool cabinet and allows me to bring the tools to my bench when needed.

TELL A STORY. Another way to find a box design is to center it around a story. Perhaps the wood you'll use is from a family farm, or is meant to remind you of an event or trip. The book-shaped box in the upper right is based on one carried by an Iowa soldier during the Civil War. I saw it at the state historical museum and liked the idea of a book box that held important items, a pen, and paper to stay connected to his faraway home.

EXPERIMENT. At a small scale, a box is an ideal way to play around with a new technique, material, or joinery method. The lid of the upper left box is carved with a router and a set of core box bits. Making the panel the focal point of the box and backing down on the other details lets it stand out.

No single box needs to exhibit all these lessons blatantly. However by keeping these in mind, you can begin to figure out approaches to make your next box the best one yet. W

▲ Boxes built around a new technique (carved lid), or a story (book box), or a purpose (tool box) tend to exhibit a sense of liveliness.

HIGHLY ADORNED JEWELRY BOX

Or Not. Perhaps the best part about learning lessons like the ones I share above, is knowing when to break them, or at least set them aside. With the jewelry box at right, I went for broke. The box lid and body are covered in bold burl veneer, detailed moldings adorn the lid, a striking inlay banding, and a raised base could be seen to violate the "rule of three." I used small hinges to attach the lid (and broke a couple of soft brass screws in the process — lesson relearned).

On the other hand, the distinctions between the lid, the body, and the base are clearly evident, as are the scales of the various details. Besides that, there's a story behind it. I made this as a significant wedding anniversary gift for my wife. And it serves a definite purpose. So maybe it's the culmination of all that a box project can be.

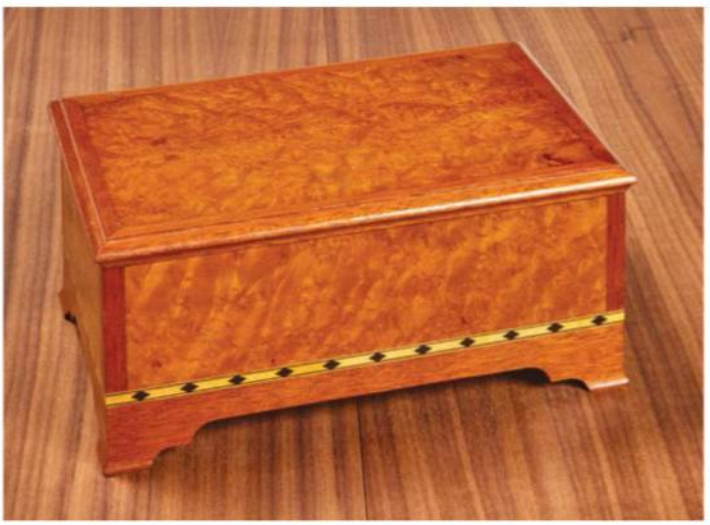

Sources

Most of the materials and supplies you'll need to build the projects are available at hardware stores or home centers. For specific products or hard-to-find items, take a look at the sources listed here. You'll find each part number listed by the company name. See the left margin for contact information.

MAIL ORDER SOURCES

Project supplies may be ordered from the following companies:

Woodsmith Store
800-444-7527
store.woodsmith.com

Fuji Spray
800-650-0930
fujispraysystems.com

Home Depot
homedepot.com

Lee Valley
800-871-8158
leevalley.com

Menards
menards.com

Michaels
michaels.com

MicroJig
855-747-7233
microjig.com

Milwaukee
milwaukeetool.com

Old Masters
800-747-3436
myoldmasters.com

Paracord Galaxy
844-727-2267
paracordgalaxy.com

Rockler
800-279-4441
rockler.com

TIPS & TECHNIQUES *(p.6)*

- **Lee Valley**
  Toggle Clamp 88F0501

GREAT GEAR *(p.22)*

- **MicroJig**
  CNC Kit CN-P1234K11
  Router Guide . . . MFRG-400-025
- **Milwaukee**
  Random Orbit Sander . . 2837-20
- **Fuji Spray**
  D6 Turbine D6 250121
  T70 Spray Gun. 4006-T70

TOOL STOOL *(p.28)*

It's tempting to build a project like the stool with nice-looking hardwood, but the added weight will make carrying it a pain. Instead, your best bet is to work with nice-looking softwood: yellow pine (like we used), white pine, cypress, or fir. Paint makes a great finish. For our version, we applied a couple coats of wiping varnish. The oil warmed up the look of the pine, too.

- **Lee Valley**
  24mm Walnut Knobs . .02G2022

6 DRAWER DRESSER *(p.36)*

No stain was used on the dresser. I like to warm up the cherry with a coat of *Old Masters'* Tung Oil Varnish. The case and drawers are protected though with a couple of coats of lacquer.

- **Menards**
  6" Cabinet Pull 84820
  14" Full-Extension Slides . 4881857

HARDWOOD DUST PAN *(p.44)*

For maximum protection on this dust pan, we gave it several coats of lacquer. We used a sprayer to apply it, but a wipe-on varnish will work just as effectively.

- **Paracord Galaxy**
  550 Paracord . . . . . .163-016 ebf

AUTOMATON *(p.50)*

The tools listed below are the ones Chris used on the Automata. It doesn't take much to create bold details. You can use any of your favorites.

- **Rockler**
  Flextool Gouge MC307
- **Lee Valley**
  Slojd Knives 02D0102

An additional creative task is the color choices of the actors. There are no set rules here other than I would suggest using artist grade colors.

Artist acrylics are the best bet for durable colors. They're easy to use diluted with water or acrylic medium. They can be found at *Michaels*, *Hobby Lobby*, or any art supply store.

BOX-MAKING *(p.62)*

Box details are best selected by the maker. Which means that recommendations are subjective. And since I avoid hardware in most instances, there isn't much to call out. The hidden pin hinges deserve mention. I get those from *Lee Valley*. They're available in two sizes. They also sell a range of inlay banding to dress up your boxes.

- **Lee Valley**
  ⅛" Hinge Pin Set 05H0201
  ¼" Hinge Pin Set 05H0204

RAZOR-SHARP EDGES in 5 Minutes!

The *Woodsmith* Cabinet Scraper System offers a fool-proof method for getting a consistent, razor-sharp edge using only a few simple tools. The secret is in the *Woodsmith* jig—a unique tool that lets you file the edge and then create the bur.

Item# 7512124
Woodsmith Cabinet Scraper System $59.99

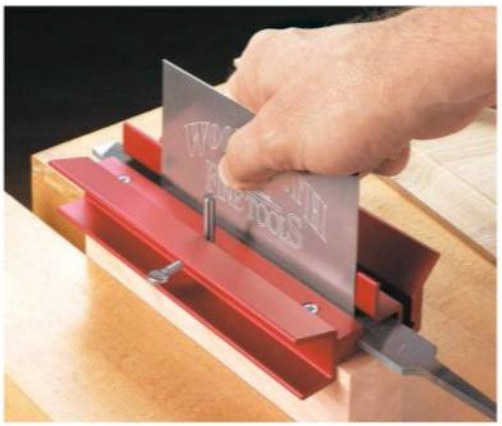

DO MORE

WITH YOUR DR® FIELD & BRUSH MOWER

Every DR® Field & Brush Mower gives you **MORE**

POWER – to mow through anything with up to 2X more than the competition.

MANEUVERABILITY – thanks to power steering and hydrostatic drive options.

FEATURES – including easy to use controls and available attachments.

CHOICE – Commercial, Electric, Walk- and Tow-Behind models available.

PRO MAX34

USA ENGINEERED AND BUILT SINCE 1985

Assembled in the USA using domestic and foreign parts.

Conquer MORE of Your Seasonal Chores with DR®

Make Your Driveway Like New with a DR® Power Grader

- Fill in potholes and smooth out washboards
- Loosen and redistribute existing material
- Tow with your ATV, UTV, or tractor

PRO 60

DR® Chippers Help You Clean Up and Clear Out

- Annihilate thick branches and reduce yard waste
- Easy to move—large wheels and easy towing
- Built USA tough

XL575

DR® POWER EQUIPMENT

Scan the code to shop **DRPower.com** today or request a free catalog!

FREE SHIPPING options available

HARVEY®
Good Enough Is Not Enough
INTELLIGENT
ALPHA A-15
THE FUTURE
OF BANDSAW
IS NOW!
HARVEY
See it live at AWFS 2025, West Hall, Booth #1047.
For more information, please visit our website: www.harveywoodworking.com